SKILLING, HELLE, CHRISTIANSEN, ROBERTSON — Structural & Civil Engineers

PROJECT THE WORLD TRADE CENTER | TITLE FL.107-RH CONNECTION DETAILS-EXT WALL -FL 107 | DATE 4-1-70

REVISIONS

5/27/70

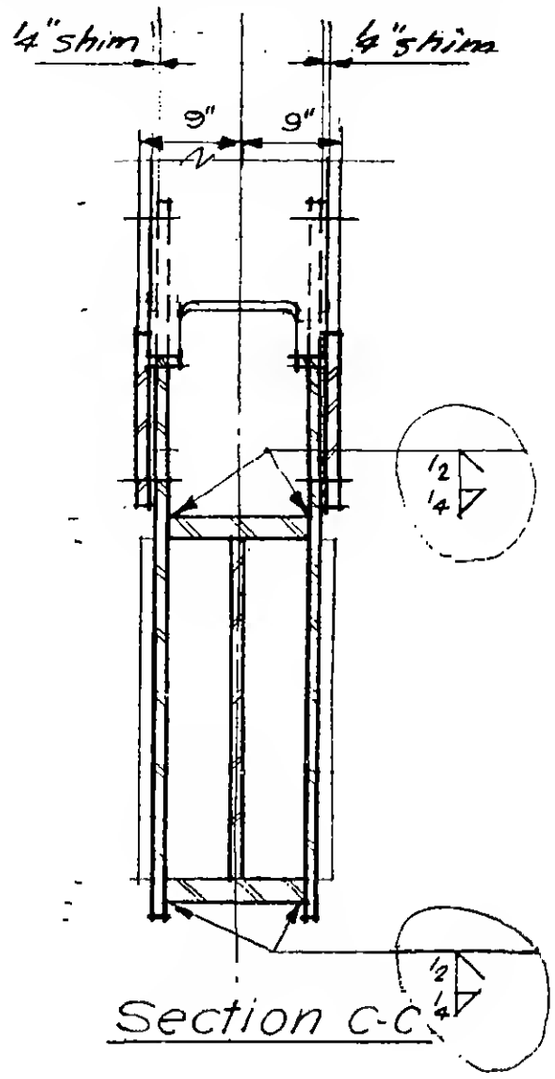

Section c-c

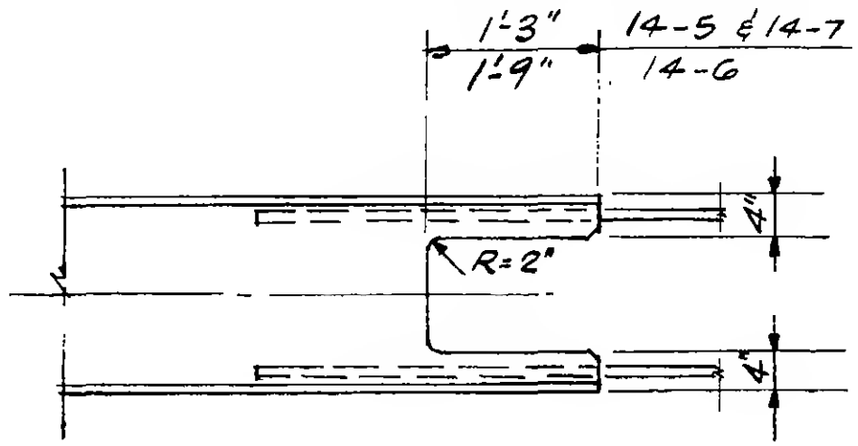

Section d-d

LICENSED PROFESSIONAL ENGINEER
LESLIE E. ROBERTSON
No. 34360
UNIVERSITY OF THE STATE OF NEW YORK

DESIGNED

DRAWN V.H.A

REVIEWED H W Brewer

9-AB14-5.2