SKILLING HELLE CHRISTIANSEN ROBERTSON — Structural & Civil Engineers

PROJECT: THE WORLD TRADE CENTER | TITLE: FL107-PH. CONNECTION DETAILS EXTERIOR WALL FL. 110 | DATE: 4-1-70

REVISIONS

6-15-70
8-3-70
12-14-70

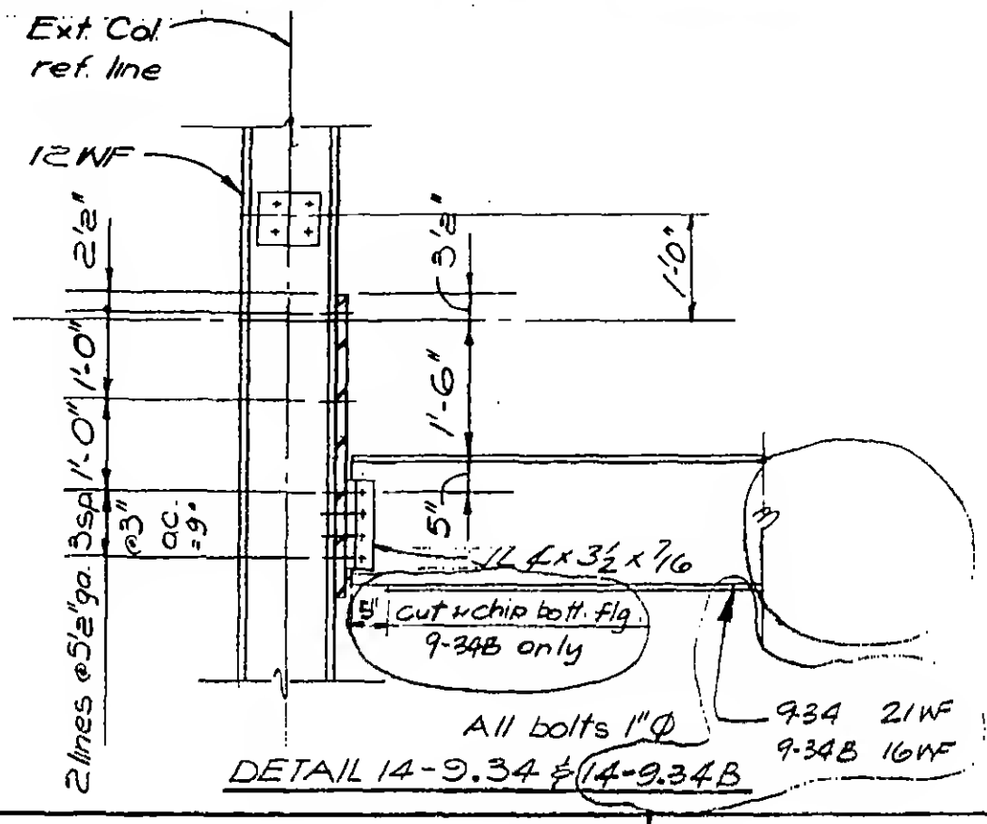

DETAIL 14-9.34 & 14-9.34B

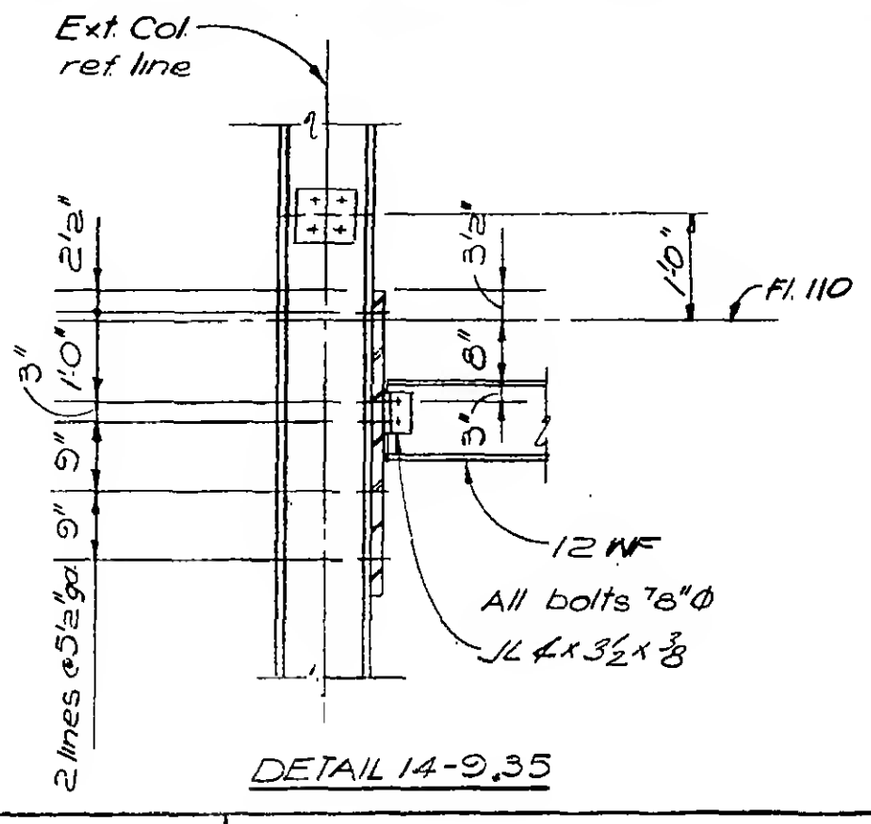

DETAIL 14-9.35

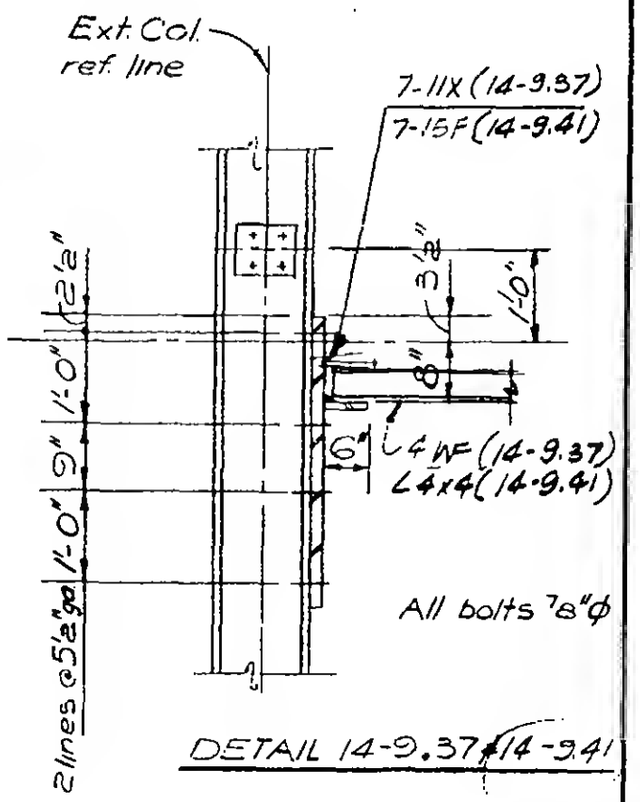

DETAIL 14-9.37 & 14-9.41

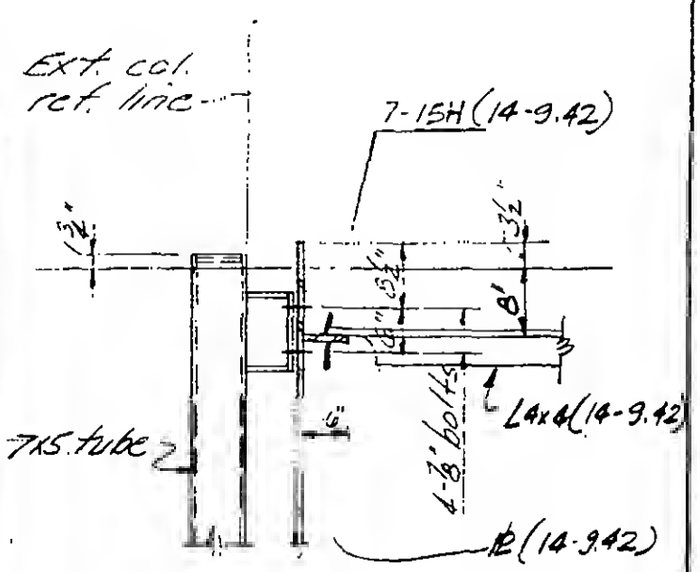

DETAIL 14-9.38 & 14-9.42

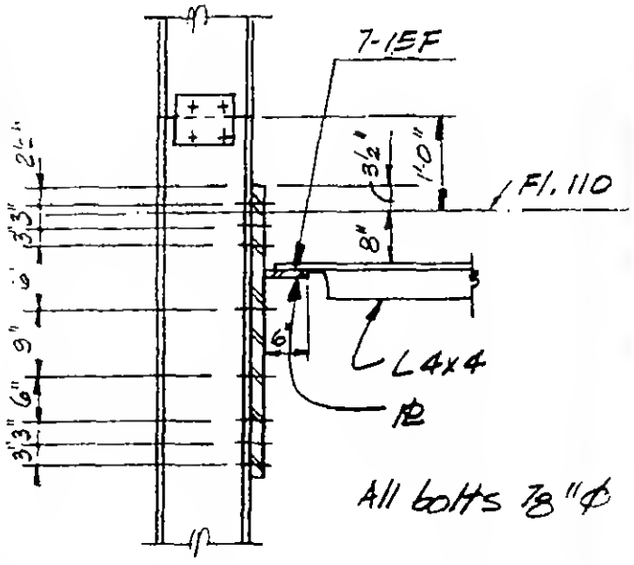

DETAIL 14-9.43

LICENSED PROFESSIONAL ENGINEER — LESLIE E. ROBERTSON — No. 34860 — UNIVERSITY OF THE STATE OF NEW YORK

DESIGNED

DRAWN: W. Clarke

REVIEWED

9-AB 14-9.2