SKILLING, HELLE, CHRISTIANSEN, ROBERTSON — Structural & Civil Engineers

PROJECT: THE WORLD TRADE CENTER | TITLE: FL. 107-PH CONNECTION DETAIL - FL. 108 | DATE: 4-1-70

REVISIONS

5/27/70

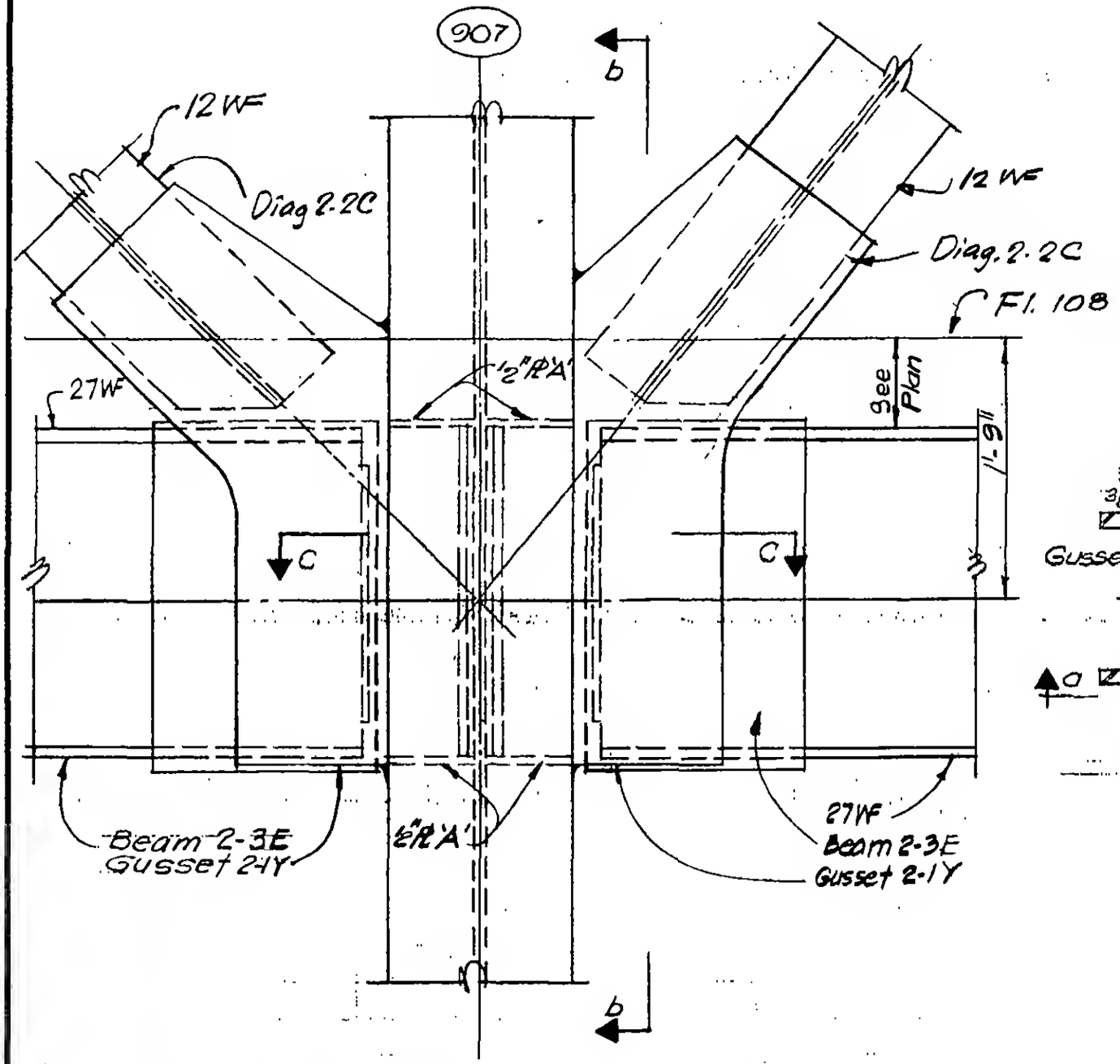

Section a-a

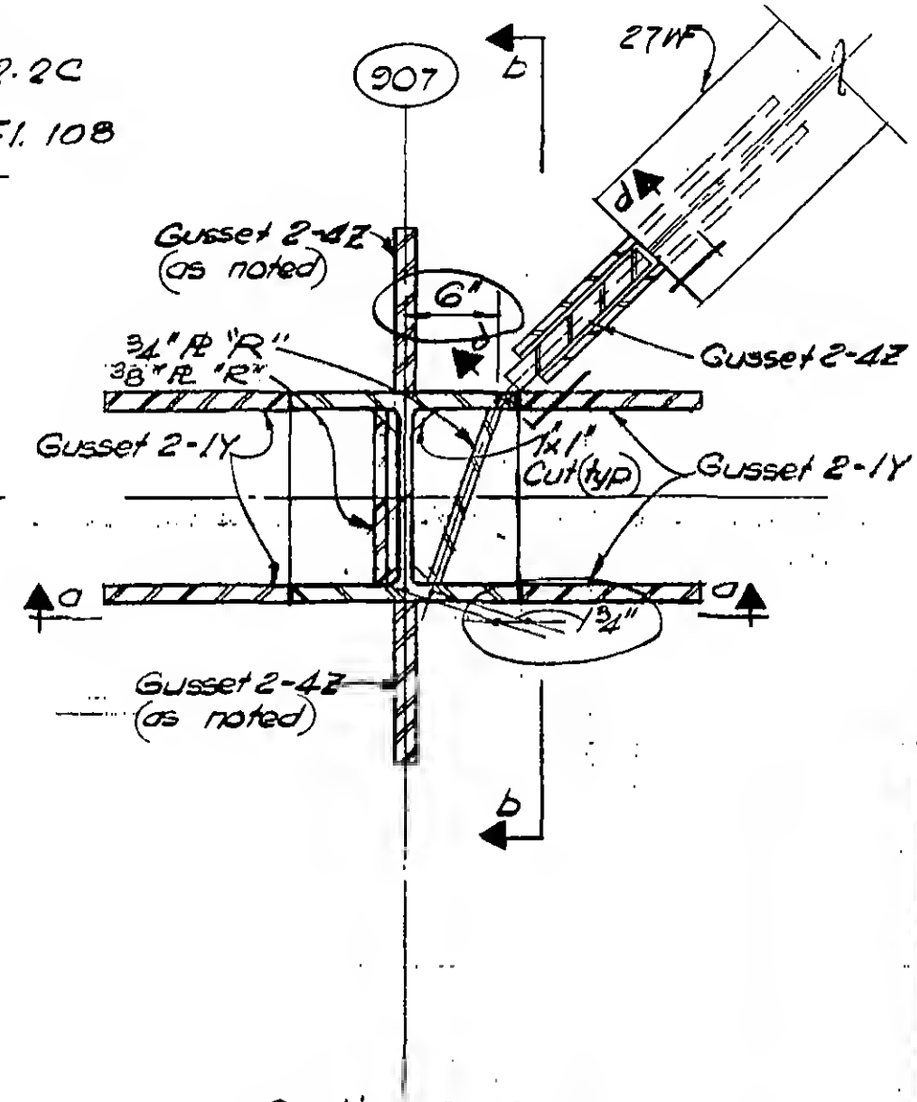

Section C - C

DETAIL 15 - 8

LICENSED PROFESSIONAL ENGINEER
LESLIE E. ROBERTSON
No. 34360
UNIVERSITY OF THE STATE OF NEW YORK

DESIGNED: Hwang

DRAWN: P. Ozeki

REVIEWED: E. Drakos

9-AB15-8.1