SKILLING, HELLE, CHRISTIANSEN, ROBERTSON — Structural & Civil Engineers

PROJECT: THE WORLD TRADE CENTER | TITLE: FL. 107 PH. CONNECTION DETAILS = FL. 108 | DATE: 4 - 1 - 70

REVISIONS

5/27/70

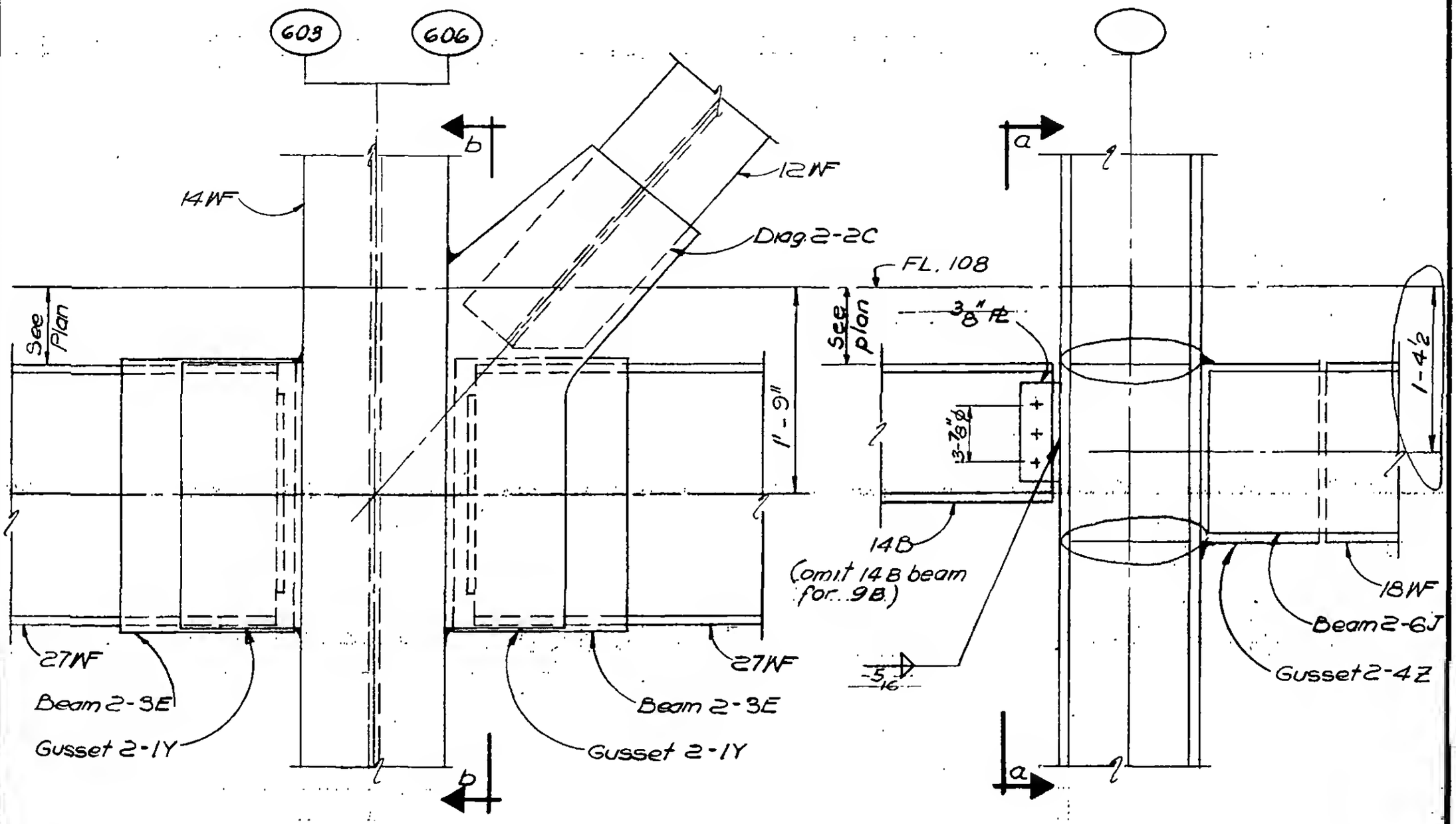

SECTION a-a

SECTION b-b

DETAIL 15-9A (col. 603, as shown)
DETAIL 15-9B (col. 606, opp.hand, as noted.)

LICENSED PROFESSIONAL ENGINEER — LESLIE E. ROBERTSON — No. 34960 — UNIVERSITY OF THE STATE OF NEW YORK

DESIGNED: C. HWANG
DRAWN: M. Clarke
REVIEWED: E. Dracos

9-AB15-9