SKILLING, HELLE, CHRISTIANSEN, ROBERTSON — Structural & Civil Engineers

PROJECT THE WORLD TRADE CENTER | TITLE FL.107–PH CONNECTION DETAILS- FL.108 | DATE 4-1-70

REVISIONS

5/27/70

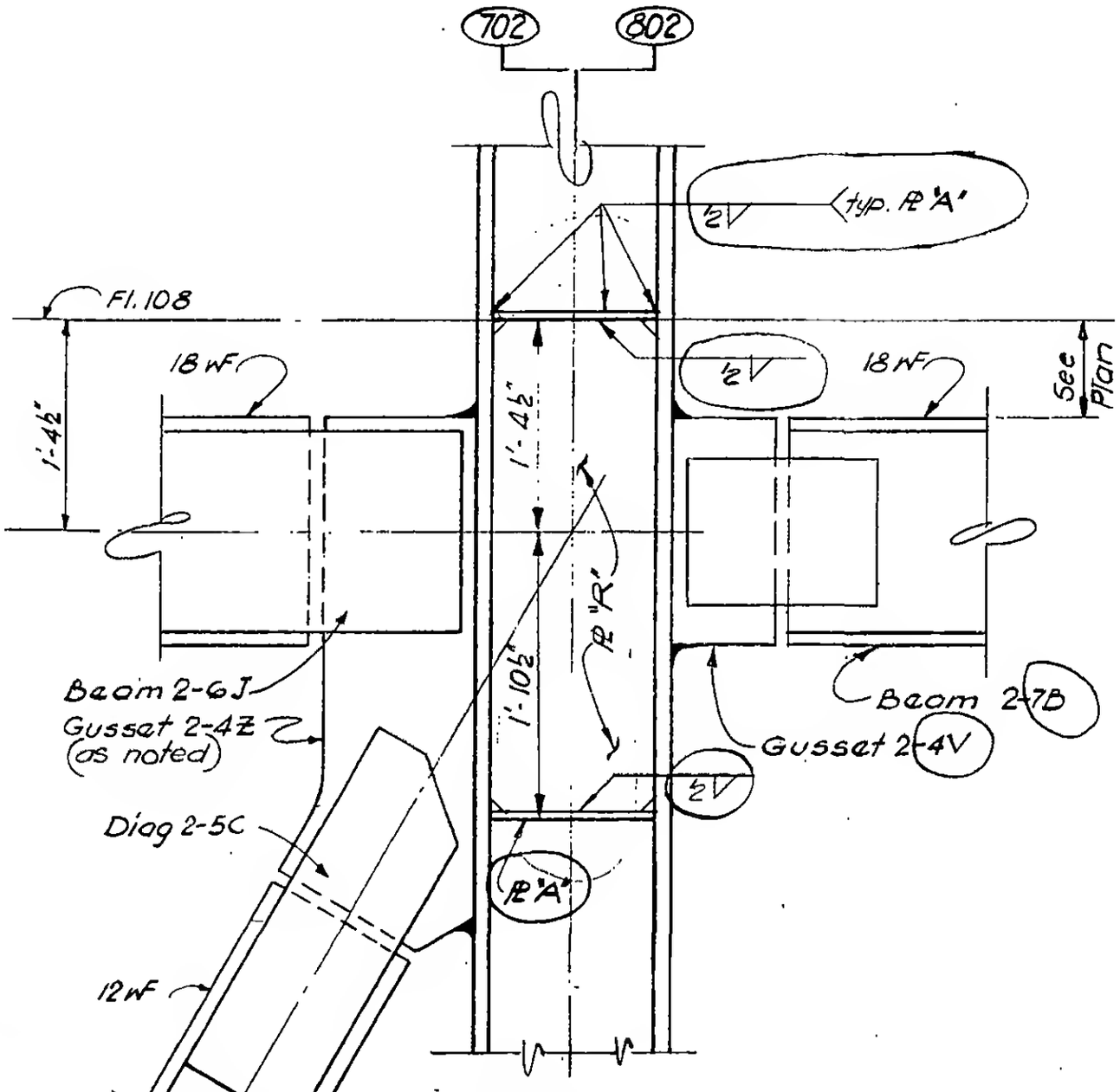

Section b-b

Col. 702 as shown

Col. 802 opp. hand

LICENSED PROFESSIONAL ENGINEER
LESLIE E. ROBERTSON
No. 34960
UNIVERSITY OF THE STATE OF NEW YORK

DESIGNED Hr Von

DRAWN D. Huggins

REVIEWED E. Dracos

9-AB 15-13.2