SKILLING, HELLE, CHRISTIANSEN, ROBERTSON — Structural & Civil Engineers

PROJECT: ~~THE WORLD~~ TRADE CENTER | TITLE: AL 107-PH CONNECTION DETAILS - FL 110 | DATE: X2-14-70

REVISIONS

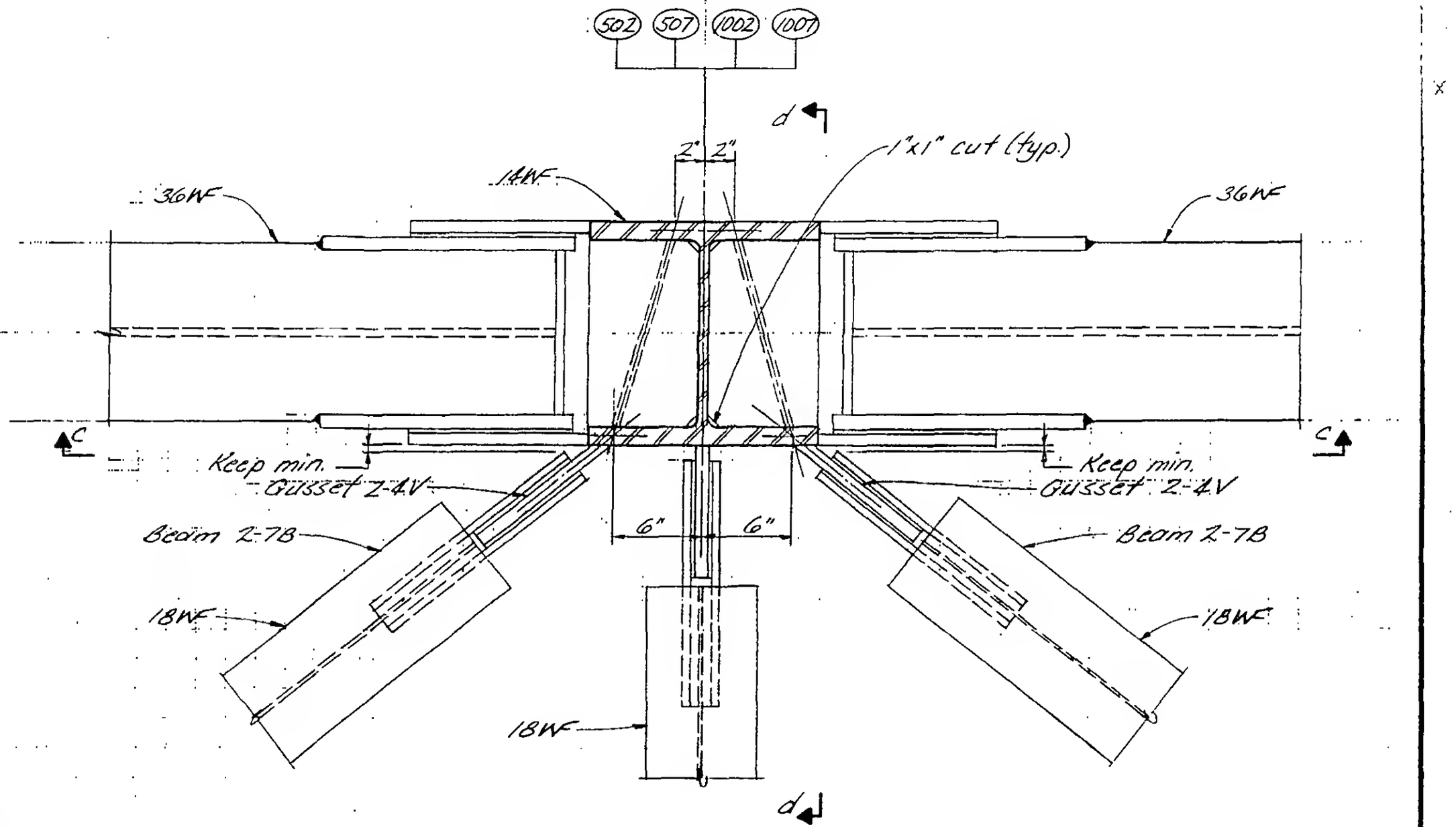

Plan

Detail 16-2B

(Col. 502 as shown)

(Cols. 507, 1002 & 1007 similar)

LICENSED PROFESSIONAL ENGINEER
LESLIE E. ROBERTSON
No. 34960
UNIVERSITY OF THE STATE OF NEW YORK

DESIGNED

DRAWN J. Adams

REVISED

9-B16-2.3