SKILLING, HELLE, CHRISTIANSEN, ROBERTSON — Structural & Civil Engineers

PROJECT THE WORLD TRADE CENTER | TITLE FL 107 PH CONNECTION DETAILS - FL 110 | DATE 4 - 1 - 70

REVISIONS

6/15/70

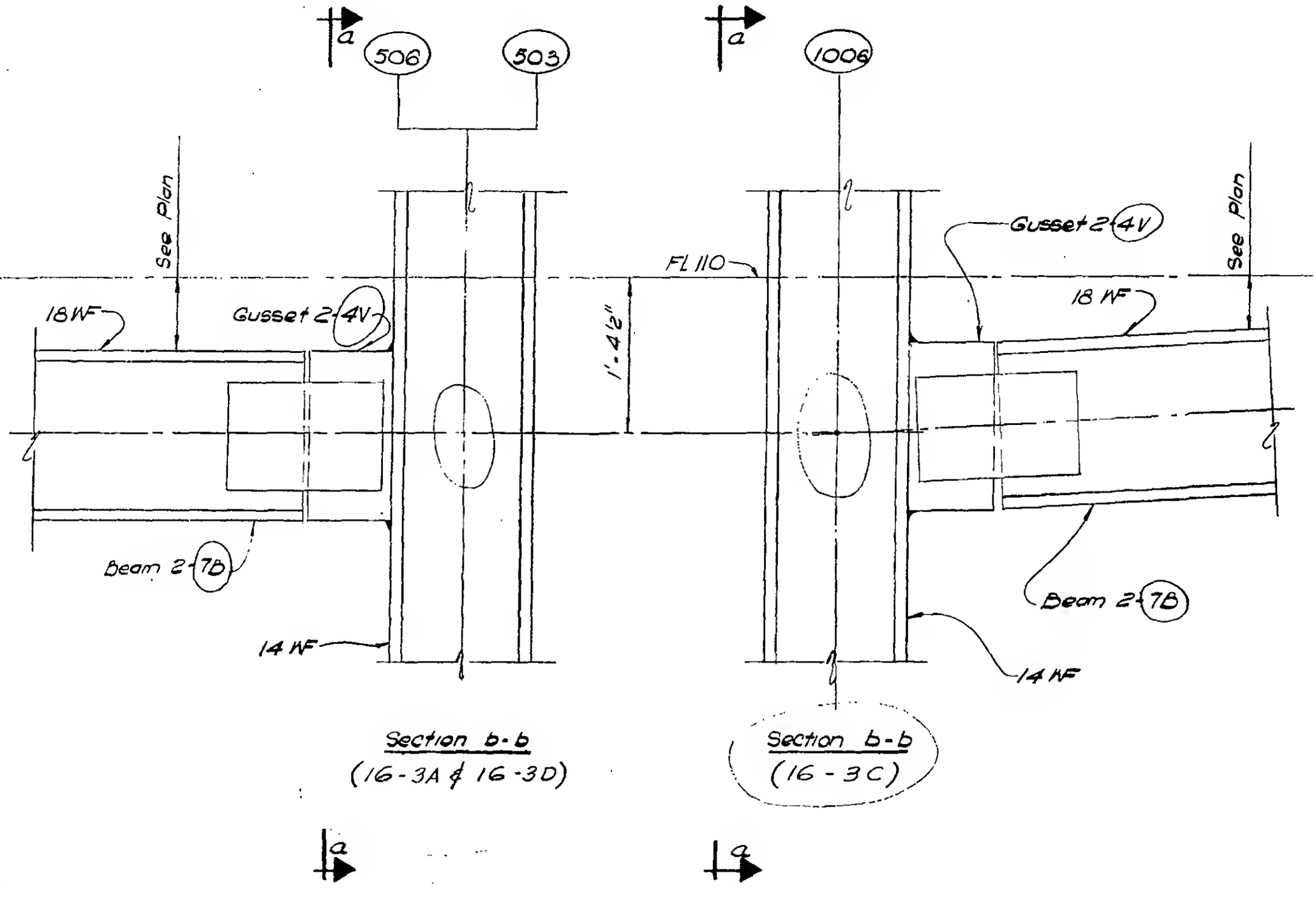

Section b-b
(16-3A & 16-3D)

Section b-b
(16-3C)

a a

LICENSED PROFESSIONAL ENGINEER
LESLIE E. ROBERTSON
No. 34360
UNIVERSITY OF THE STATE OF NEW YORK

DESIGNED K. HWANG

DRAWN W Clarke

REVIEWED E. Dracos

9-AB16-3.2