SKILLING, HELLE, CHRISTIANSEN, ROBERTSON — Structural & Civil Engineers

PROJECT: THE WORLD TRADE CENTER | TITLE: FL 107 - PH CONNECTION DETAILS - FL 110 | DATE: 4-1-70

REVISIONS

6-15-70
7-8-70

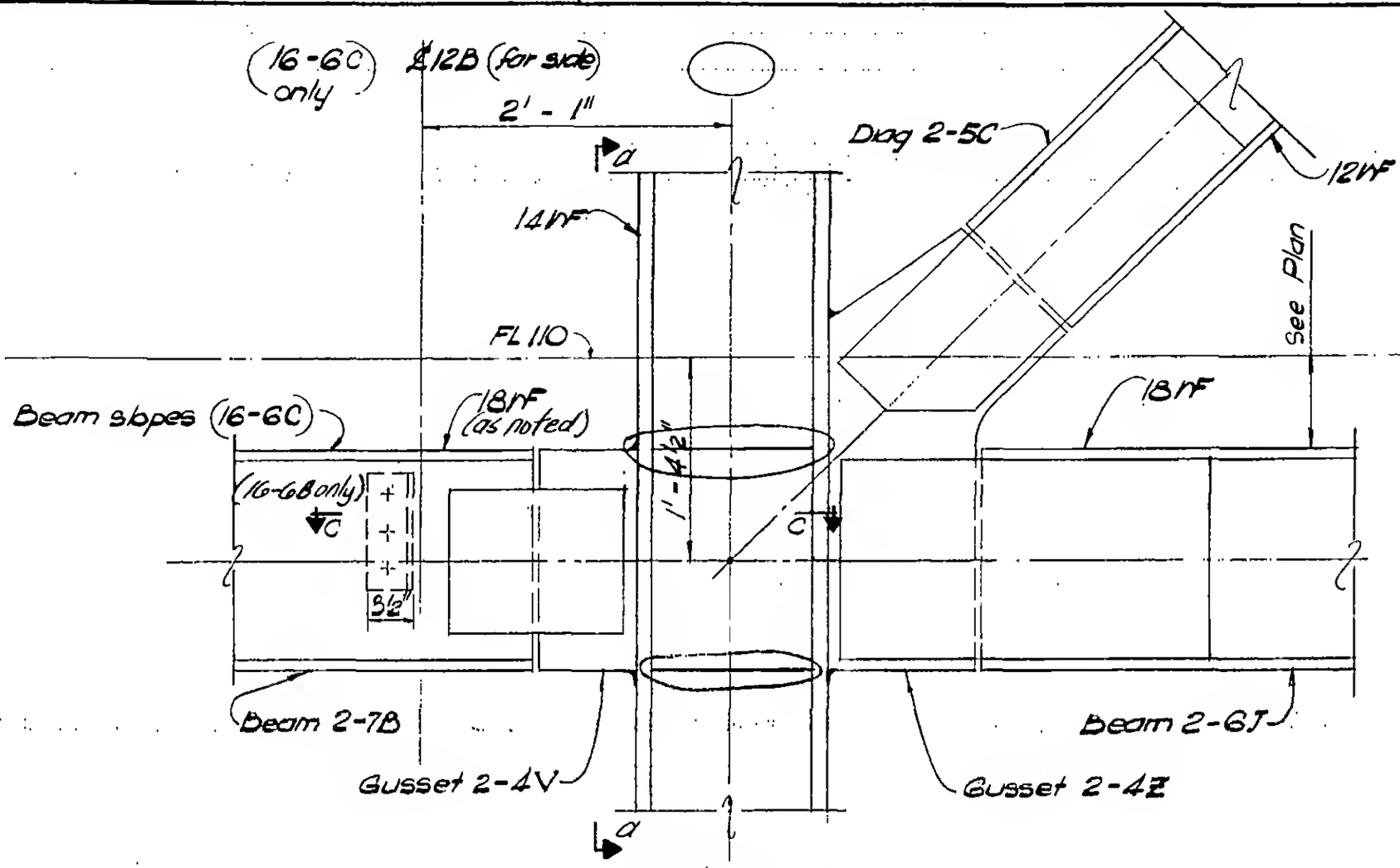

Section b-b
(16-6C & 16-6D)

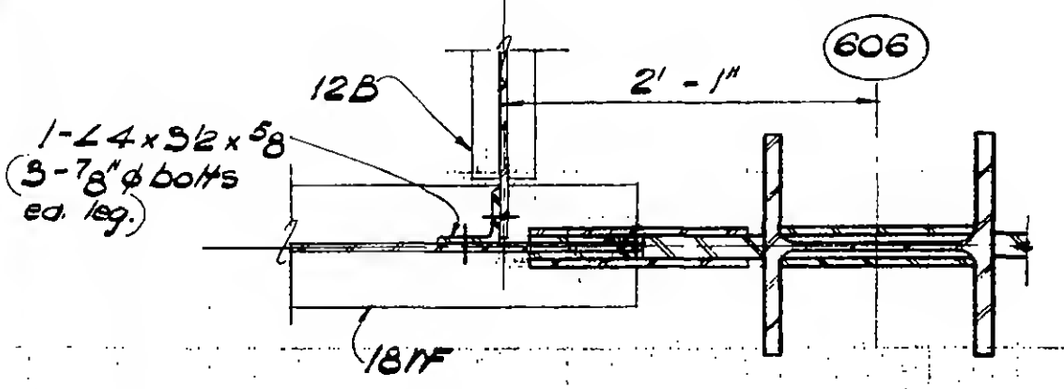

Section c-c
(16-6C only)

LICENSED PROFESSIONAL ENGINEER — LESLIE E. ROBERTSON — No. 34360 — UNIVERSITY OF THE STATE OF NEW YORK

DESIGNED: K. HWANG
DRAWN: M. Clarke
REVIEWED: E. Dramos

9-AB16-6.5