SKILLING, HELLE, CHRISTIANSEN, ROBERTSON — Structural & Civil Engineers

PROJECT THE WORLD TRADE CENTER | TITLE Fl. 107 - PH CONNECTION DETAIL - FL 110 | DATE 4-1-70

REVISIONS

6-15-70

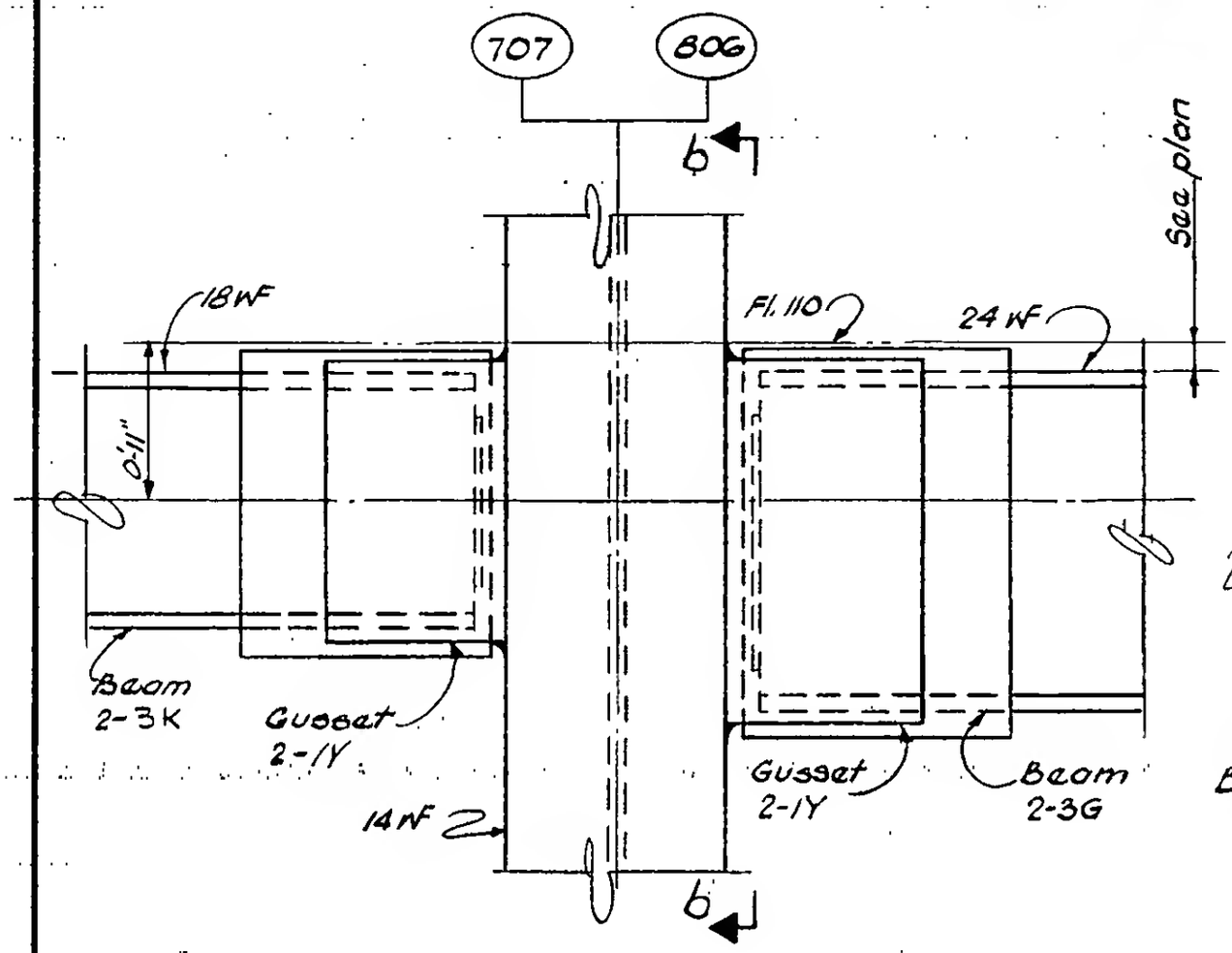

Section a-a

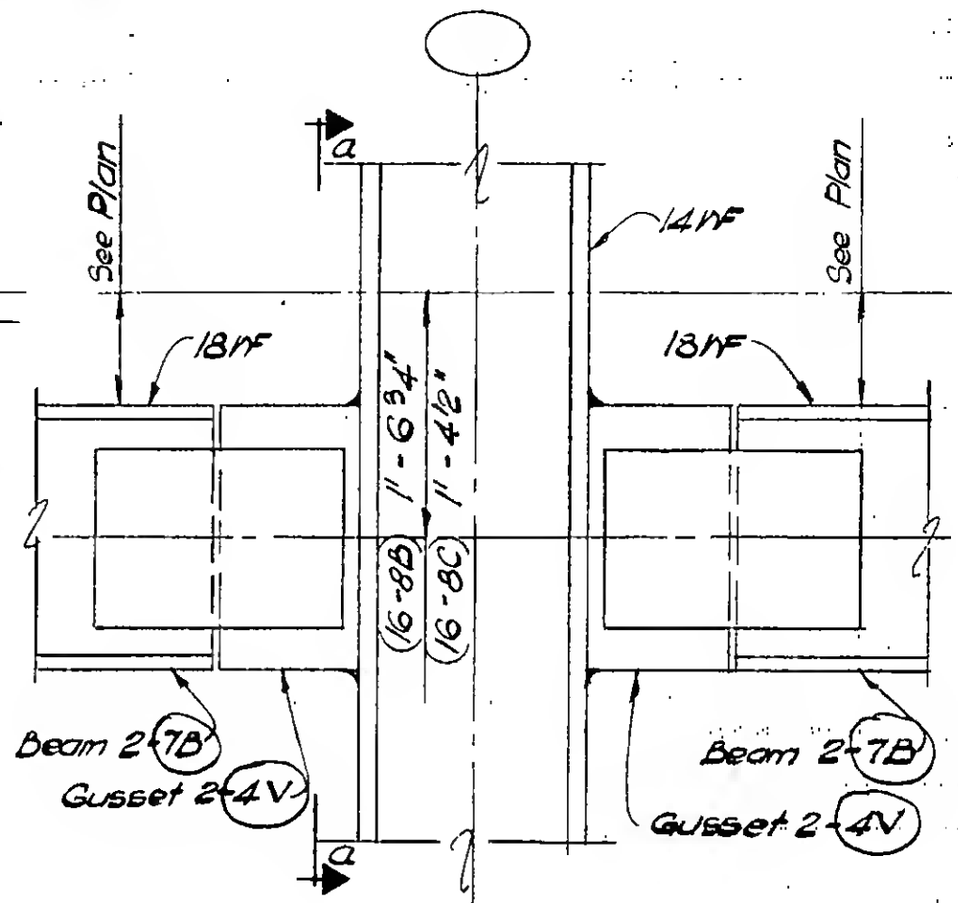

Section b-b

DETAIL 16-8B (Col. 707)
DETAIL 16-8C (Col. 806)

LICENSED PROFESSIONAL ENGINEER — LESLIE E. ROBERTSON — No. 34960 — UNIVERSITY OF THE STATE OF NEW YORK

DESIGNED L. Potal

DRAWN D. Higgins

REVIEWED E. Drakos

9AB16-4-2