SKILLING, HELLE, CHRISTIANSEN, ROBERTSON — Structural & Civil Engineers

PROJECT THE WORLD TRADE CENTER | TITLE FL 107 - PH CONNECTION DETAILS - LINES 04 & 05 | DATE 4-1-70

REVISIONS

5/27/70

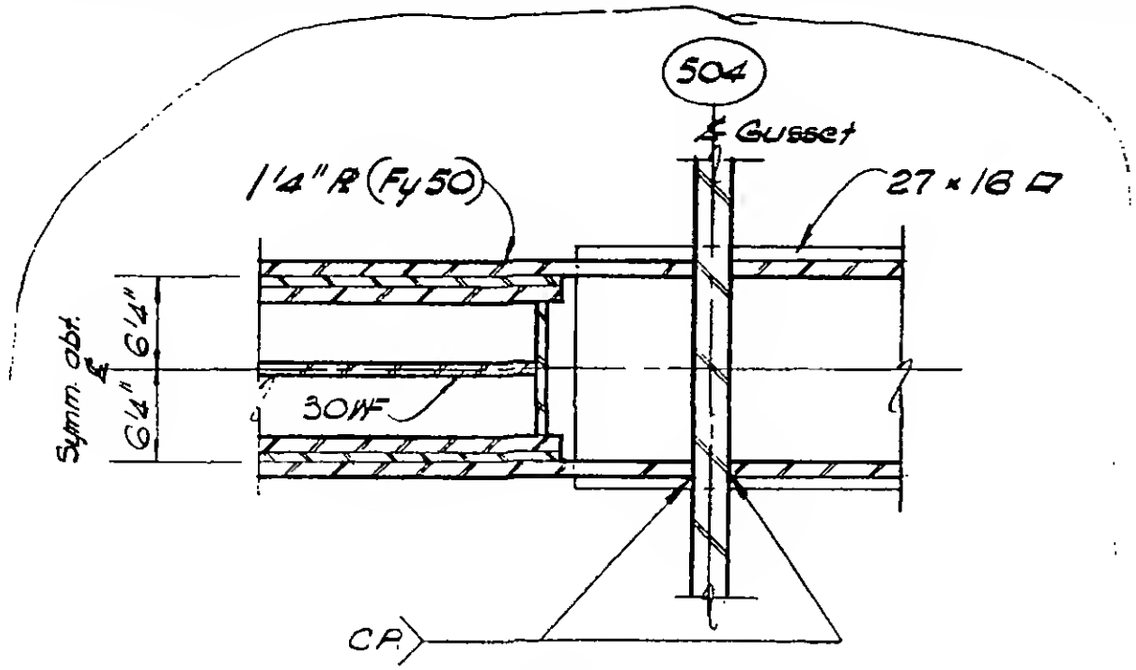

Section d-d

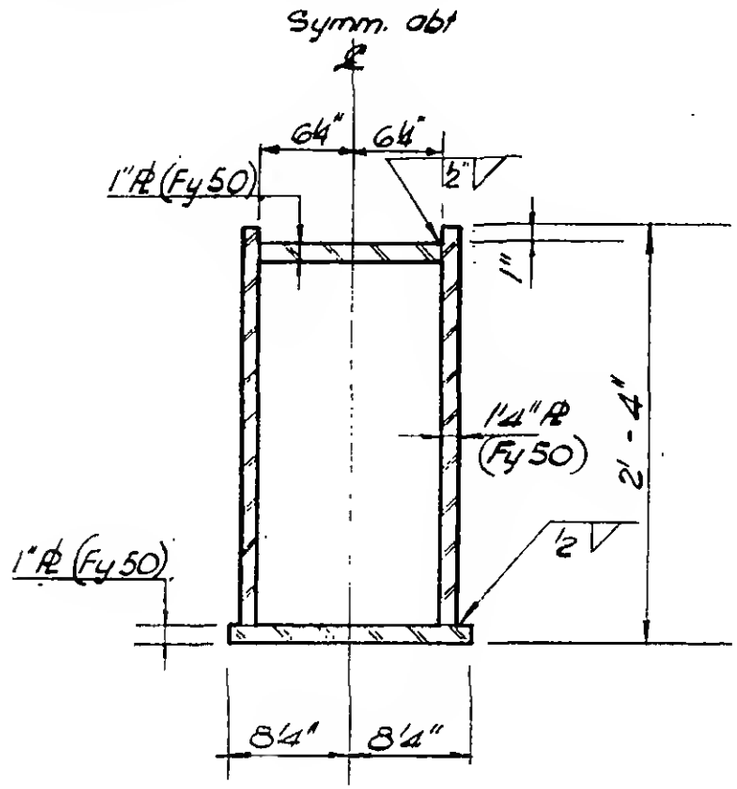

Section c-c
(27 x 16 □)

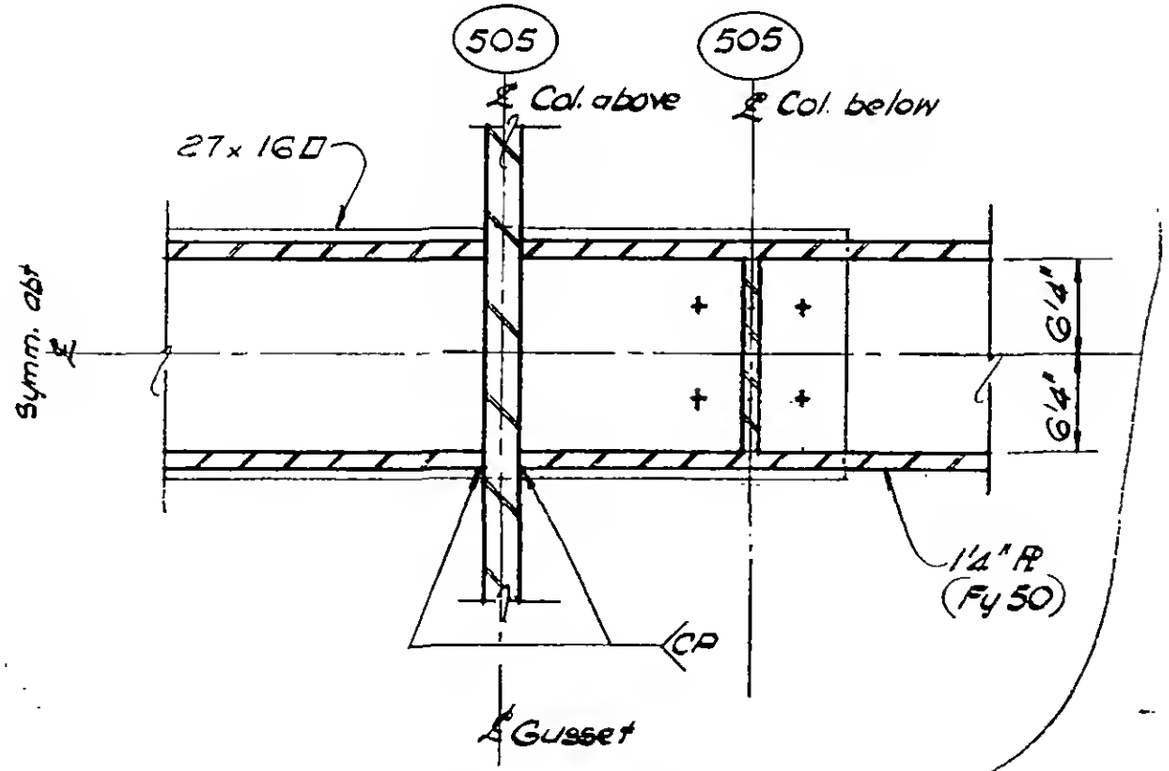

Section e-e

LICENSED PROFESSIONAL ENGINEER
LESLIE E. ROBERTSON
No. 34360
UNIVERSITY OF THE STATE OF NEW YORK

DESIGNED N. Vdov

DRAWN W. Clarke

REVIEWED E. Draxos

9-AB18-1.12