SKILLING, HELLE, CHRISTIANSEN, ROBERTSON — Structural & Civil Engineers

PROJECT: THE WORLD TRADE CENTER | TITLE: FLOOR 107-PH CONNECTION DETAILS-LINES 004 & 005 | DATE: 4-1-70

REVISIONS

6-16-70
12/14/70

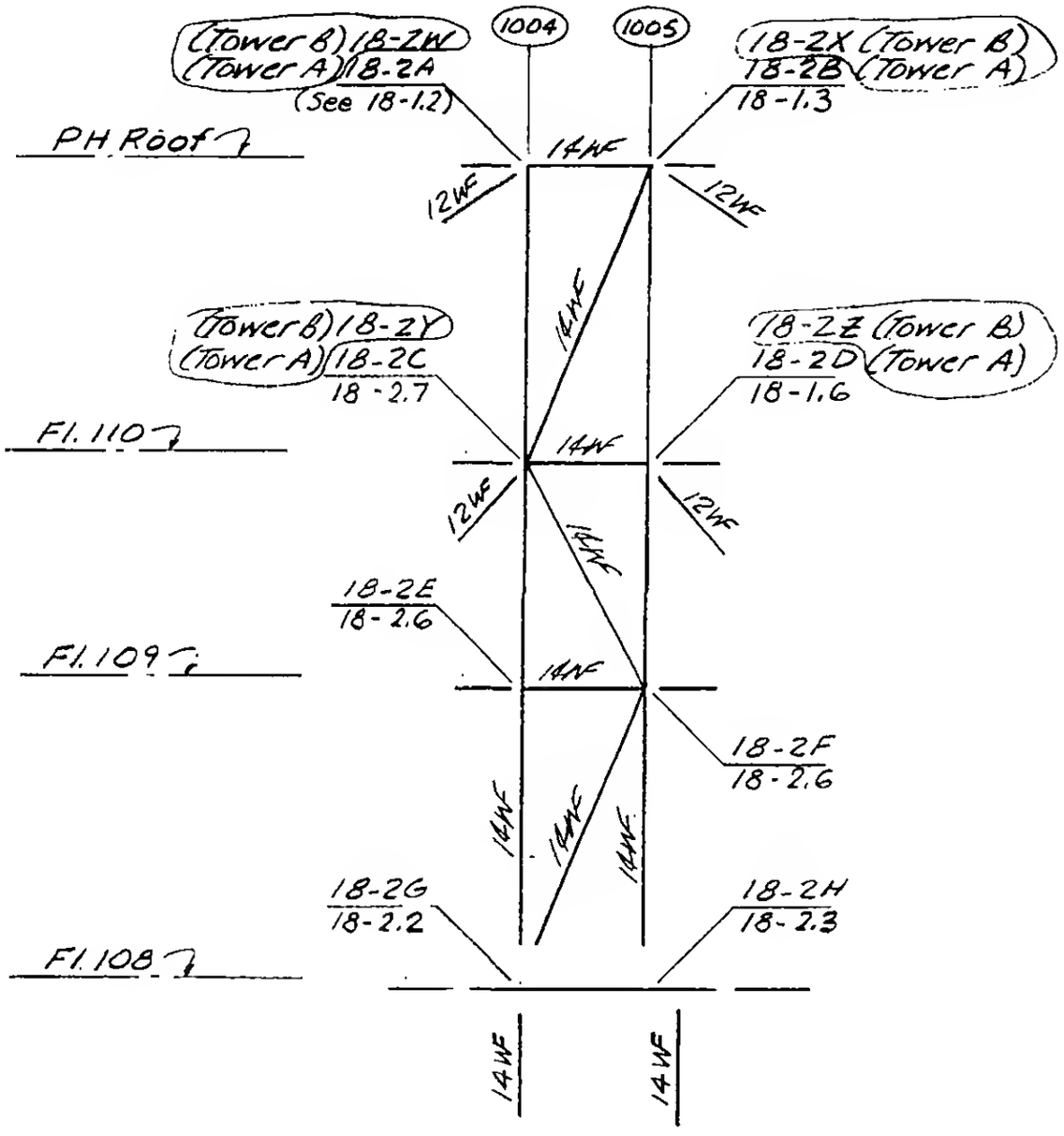

Detail 18-2

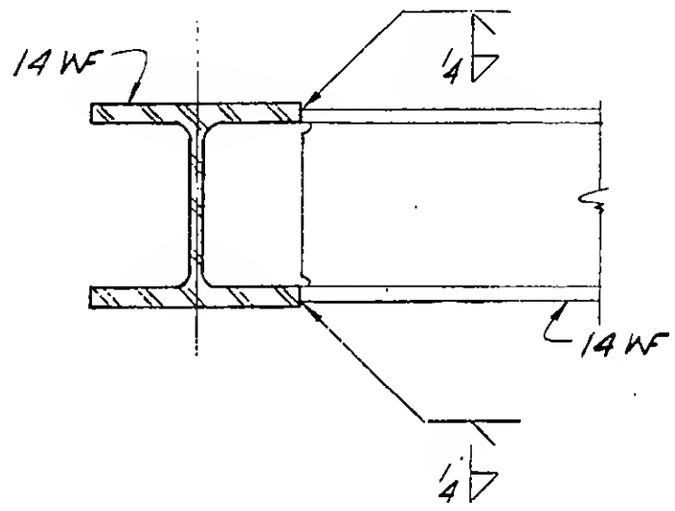

Detail 1

LICENSED PROFESSIONAL ENGINEER
LESLIE E. ROBERTSON
No. 34360
UNIVERSITY OF THE STATE OF NEW YORK

DESIGNED: H. Gray
DRAWN: J. Adams
REVIEWED: E. Drakos

9-AB18-2.1