SKILLING, HELLE, CHRISTIANSEN, ROBERTSON — Structural & Civil Engineers

WTCI-31-LERA

PROJECT: THE WORLD TRADE CENTER | TITLE: FL. 107-PH CONNECTION DETAILS - LINES 04 & 05 | DATE: 4-1-70

REVISIONS

7/9/70

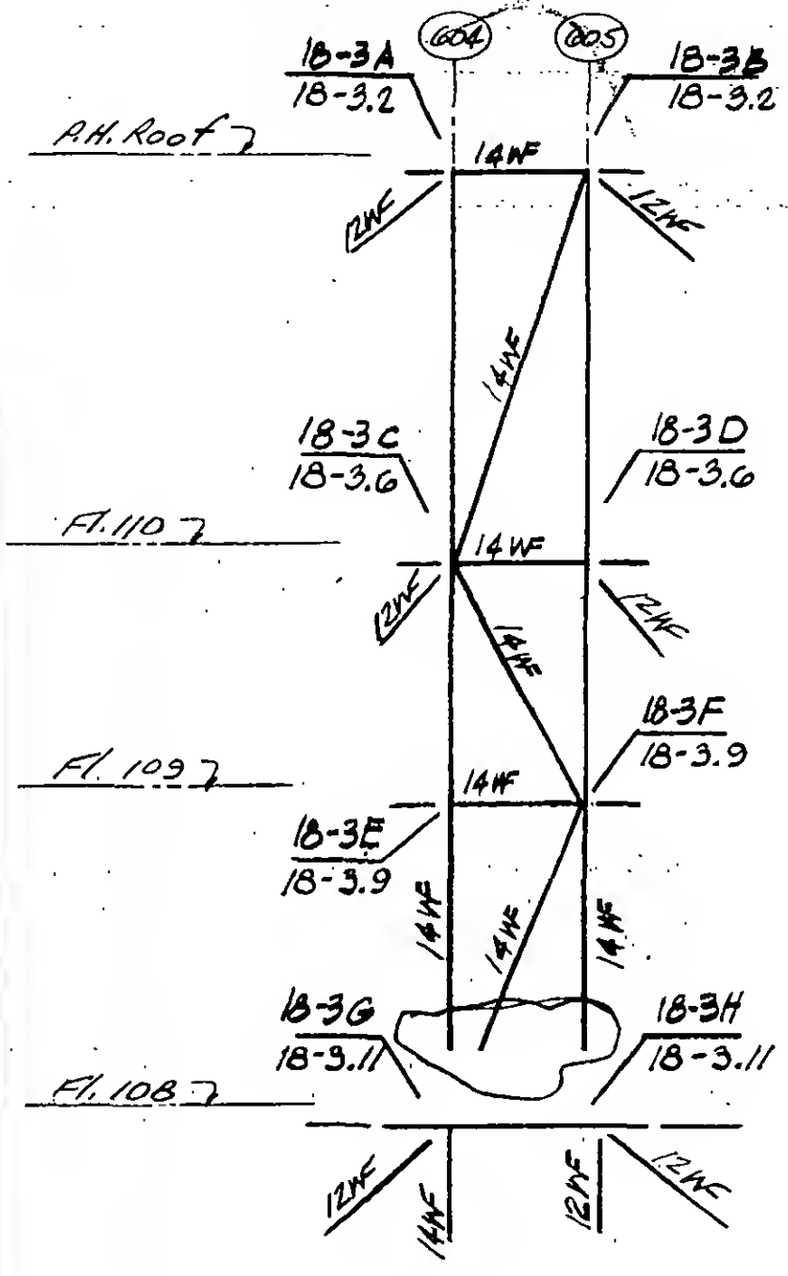

DETAIL 18-3

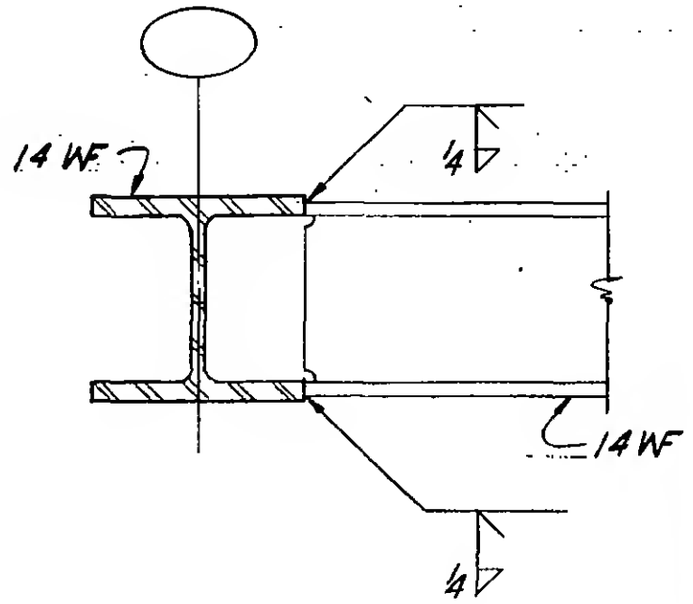

Detail (1)

DESIGNED

DRAWN
P.M. Ozeki

REVIEWED
E. Drakos

9-AB 18-3.1