SKILLING, HELLE, CHRISTIANSEN, ROBERTSON — Structural & Civil Engineers

PROJECT THE WORLD TRADE CENTER | TITLE FL 107 - PH CONNECTION DETAILS - LINES 04 & 05 | DATE 4-1-70

REVISIONS

7/9/70

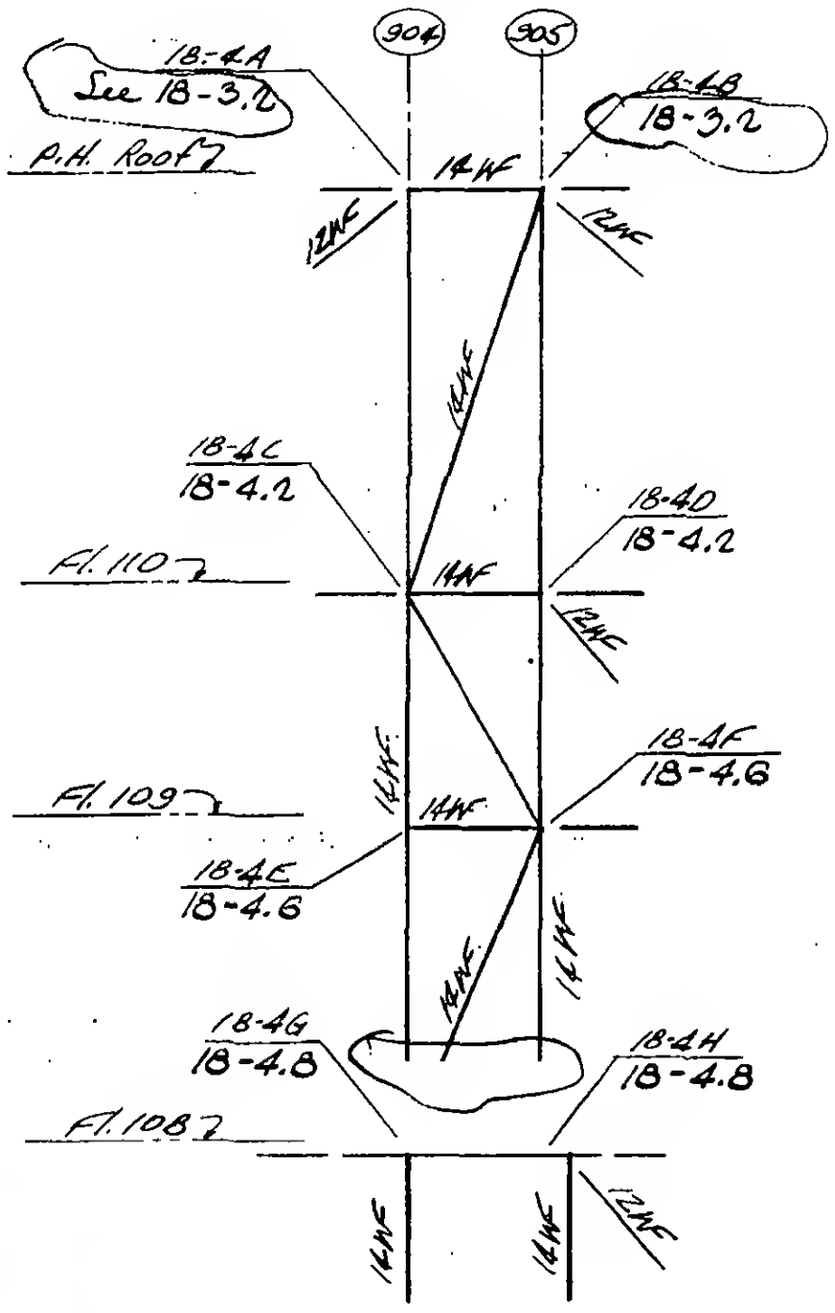

DETAIL 18-4

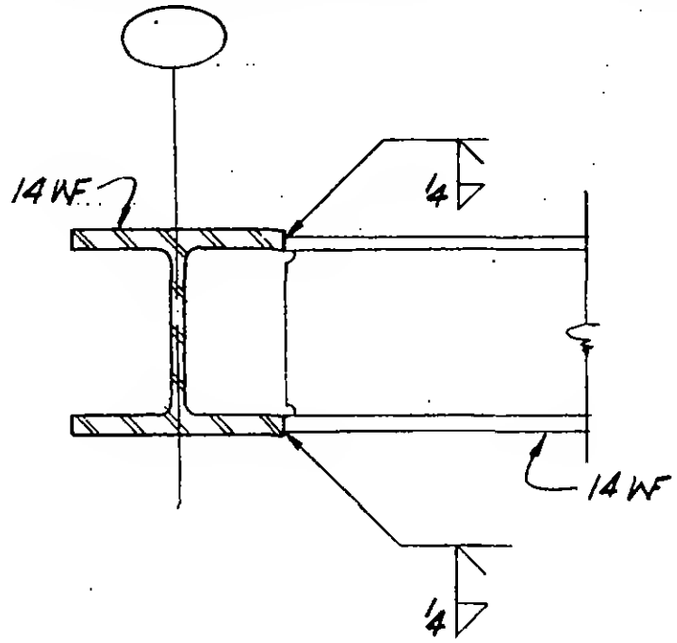

Detail (1)

LICENSED PROFESSIONAL ENGINEER
LESLIE E. ROBERTSON
No. 34360
UNIVERSITY OF THE STATE OF NEW YORK

DESIGNED

DRAWN
J. Adams

REVIEWED
E. Drakos

9-A&B-4.1