SKILLING, HELLE, CHRISTIANSEN, ROBERTSON — Structural & Civil Engineers

PROJECT THE WORLD TRADE CENTER | TITLE FL 107 - PH CONNECTION DETAILS - LINES 04 & 05 | DATE 7-8-70

REVISIONS

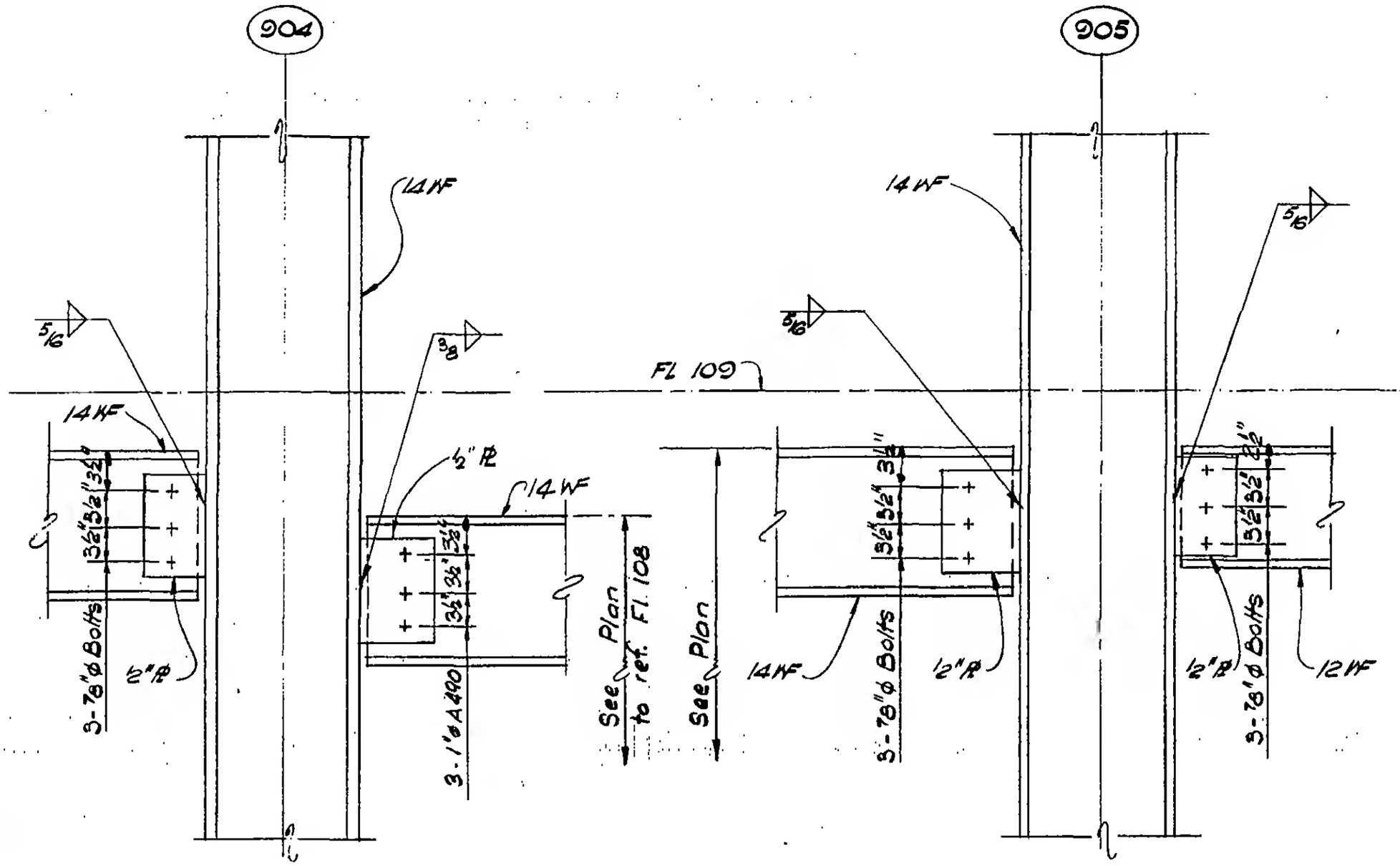

Section 6-b

LICENSED PROFESSIONAL ENGINEER — LESLIE E. ROBERTSON — No. 34360 — UNIVERSITY OF THE STATE OF NEW YORK

DESIGNED A. Patel

DRAWN N. Clarke

REVIEWED E. Dracos

9-AB 18-4.7