SKILLING, HELLE, CHRISTIANSEN, ROBERTSON — Structural & Civil Engineers

PROJECT: THE WORLD TRADE CENTER | TITLE: FL 107-PH CONNECTION DETAILS - LINES 04 & 05 | DATE: 6-22-70

REVISIONS

7-15-70

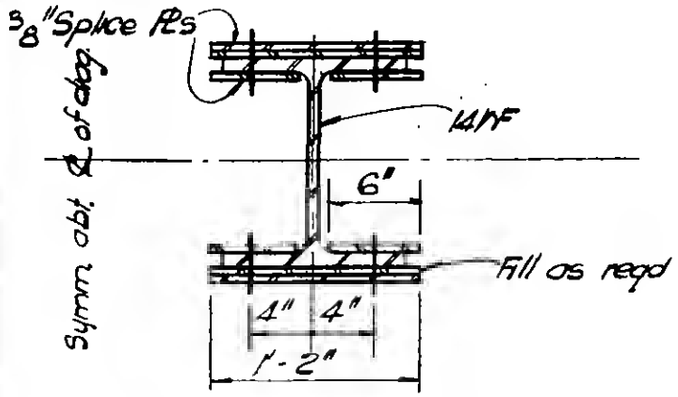

Section c-c

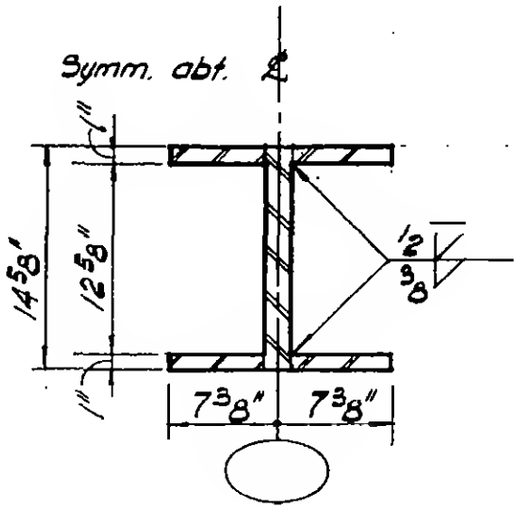

Section d-d

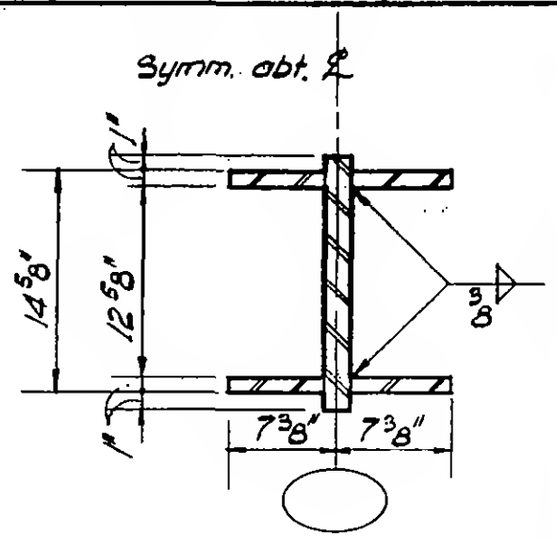

Section e-e (as shown)
Section e'-e' (similar)

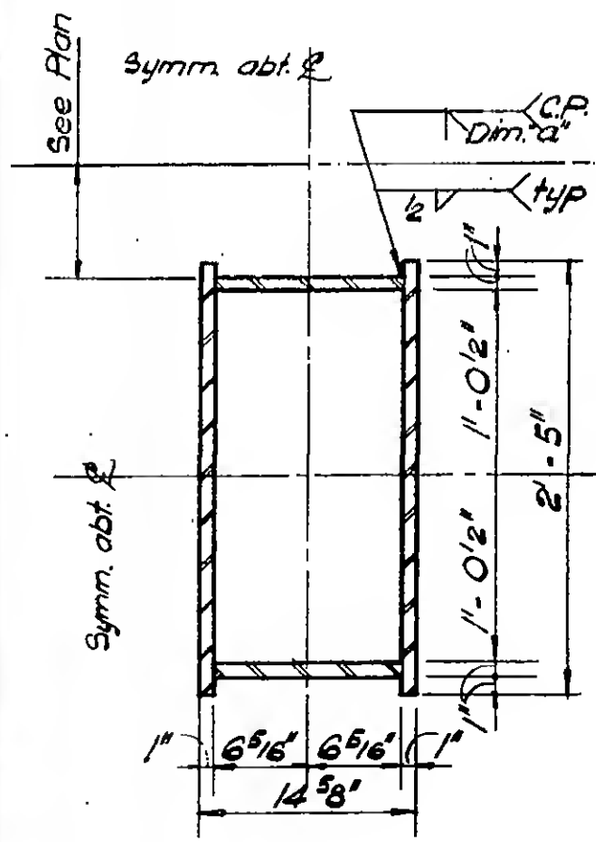

Section f-f
(29 x 14 D)

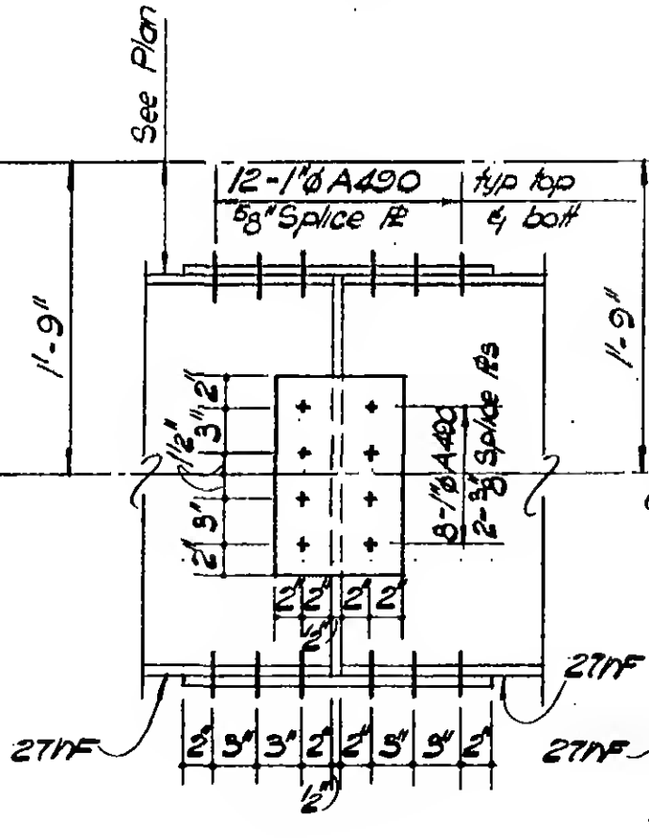

Section g-g

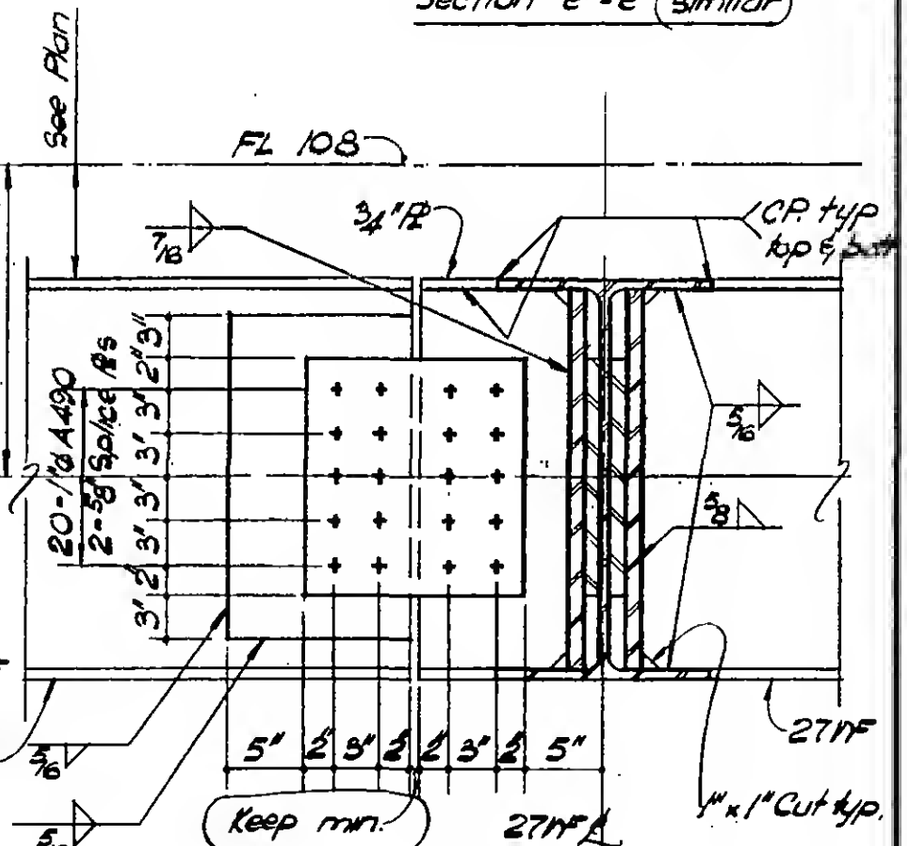

Section j-j

LICENSED PROFESSIONAL ENGINEER — LESLIE E. ROBERTSON — No. 34360 — UNIVERSITY OF THE STATE OF NEW YORK

DESIGNED

DRAWN: W. Clarke

REVIEWED: E. Drakos

9-AB18-4.10