SKILLING, HELLE, CHRISTIANSEN, ROBERTSON — Structural & Civil Engineers

PROJECT: THE WORLD TRADE CENTER | TITLE: FL. 107-PH CONNECTION DETAILS-LINES 04405 | DATE: 4-1-70

REVISIONS

7-10-70
12/14/70

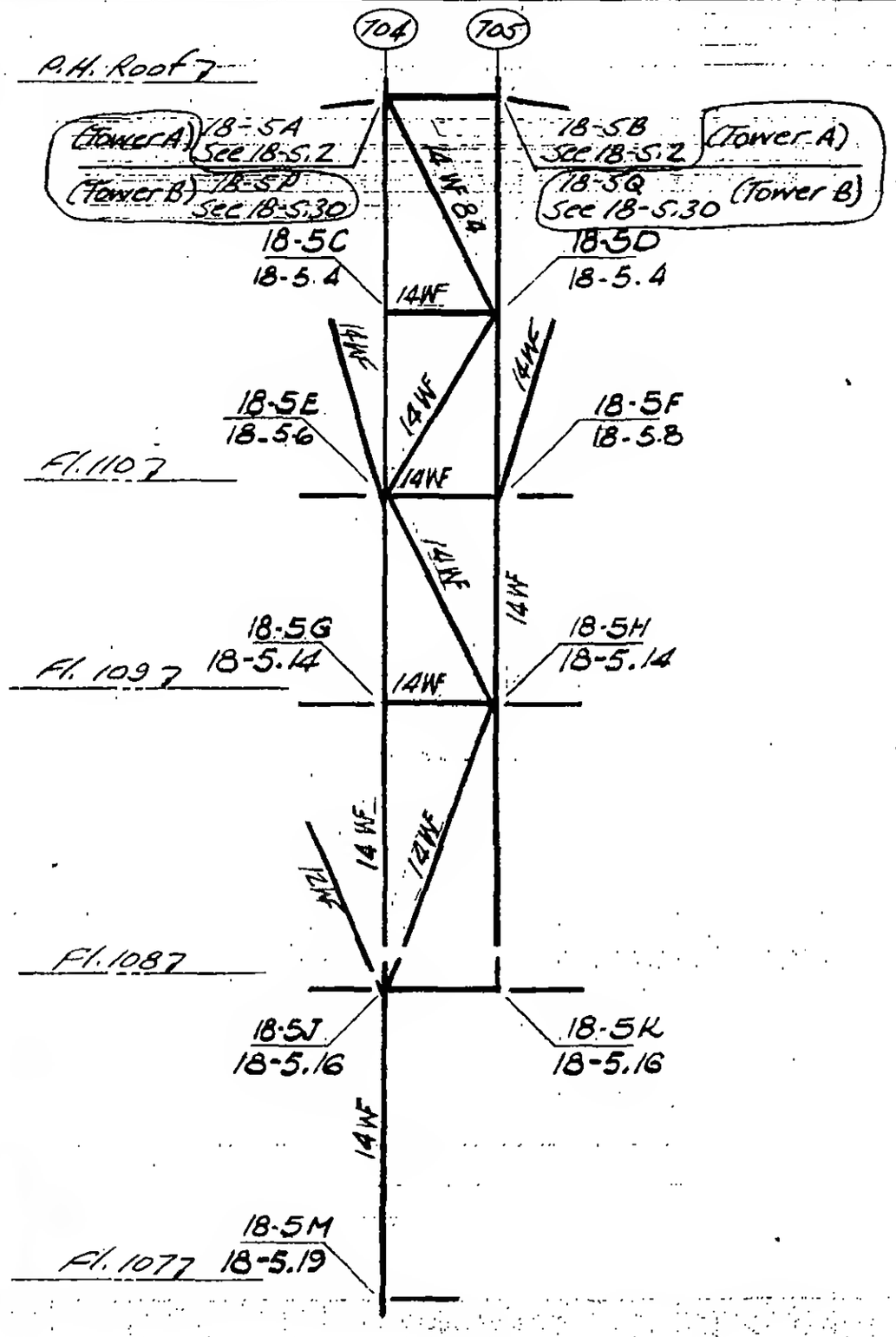

DETAIL 18-5

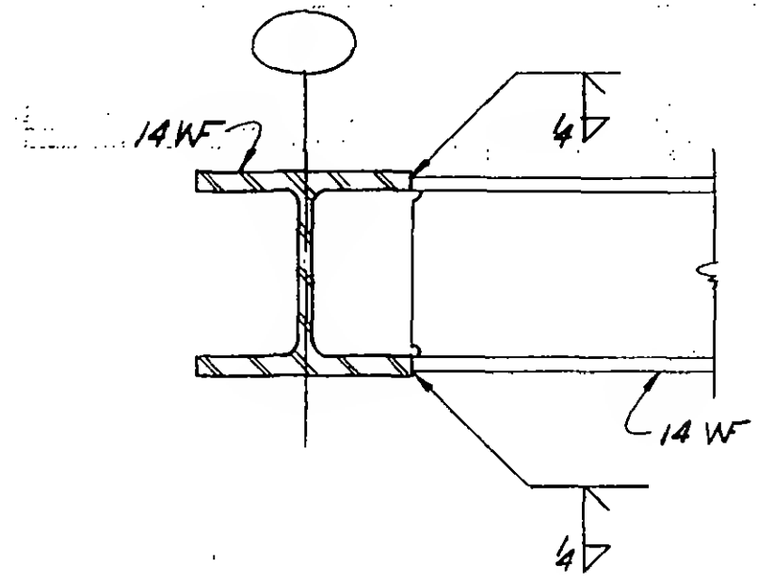

Detail (1)

LICENSED PROFESSIONAL ENGINEER — LESLIE E. ROBERTSON — No. 34360 — UNIVERSITY OF THE STATE OF NEW YORK

DESIGNED

DRAWN
M. Nichols

REVIEWED

9-AB18-5