SKILLING, HELLE, CHRISTIANSEN, ROBERTSON — Structural & Civil Engineers

PROJECT THE WORLD TRADE CENTER | TITLE FL 107 - PH CONNECTION DETAILS - LINE 04 & 05 | DATE 4-1-70

REVISIONS

7-10-70

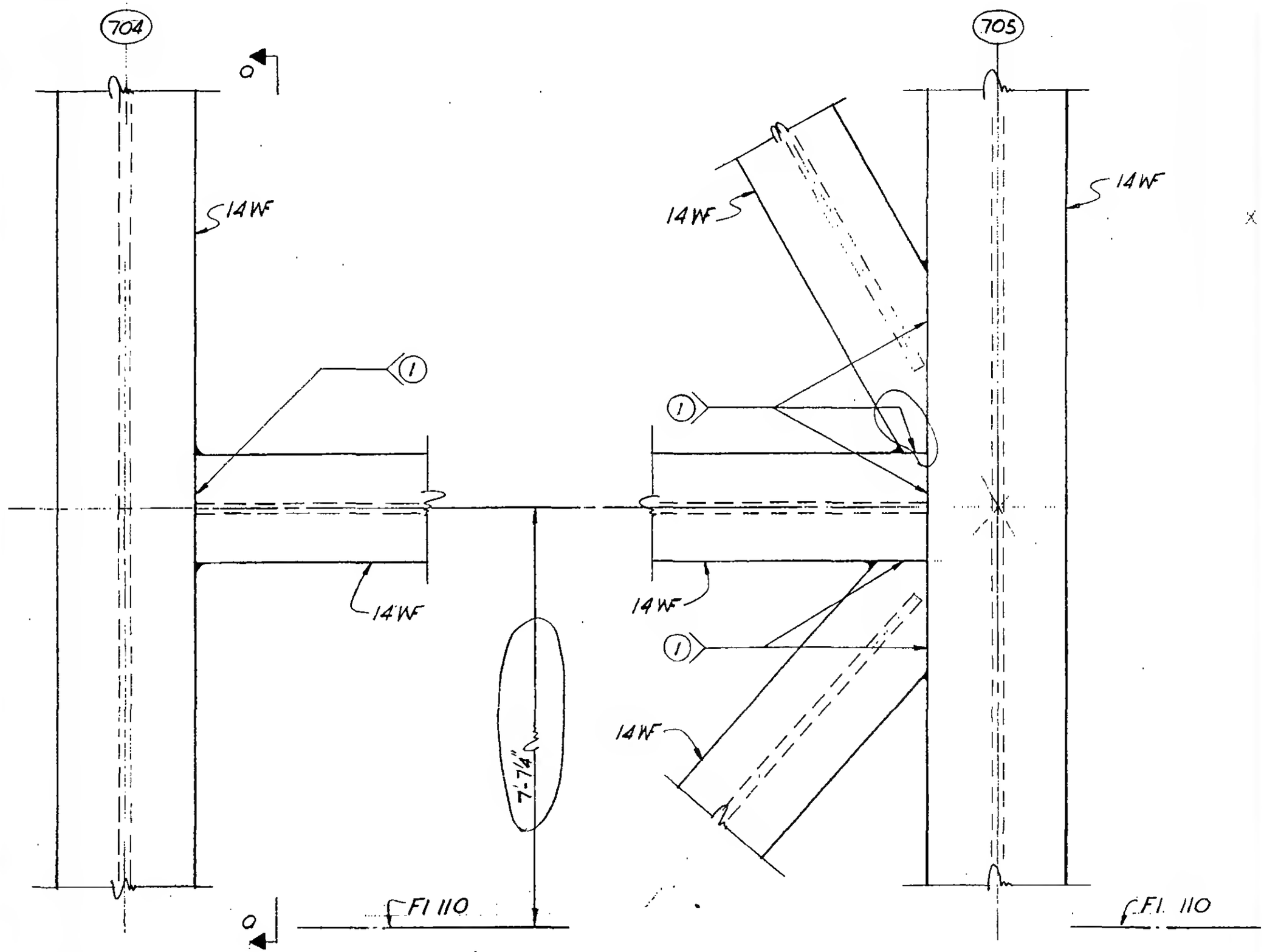

Detail 18-5C

Detail 18-5D

LICENSED PROFESSIONAL ENGINEER
LESLIE E. ROBERTSON
No. 34360
UNIVERSITY OF THE STATE OF NEW YORK

DESIGNED

DRAWN
T. Terrelonge

REVIEWED

9-AB18-5.4