SKILLING, HELLE, CHRISTIANSEN, ROBERTSON — Structural & Civil Engineers

PROJECT: THE WORLD TRADE CENTER | TITLE: Fl. 107 - PH CONNECTION DETAILS - LINES 04 & 05 | DATE: 4-1-70

REVISIONS

7-10-70

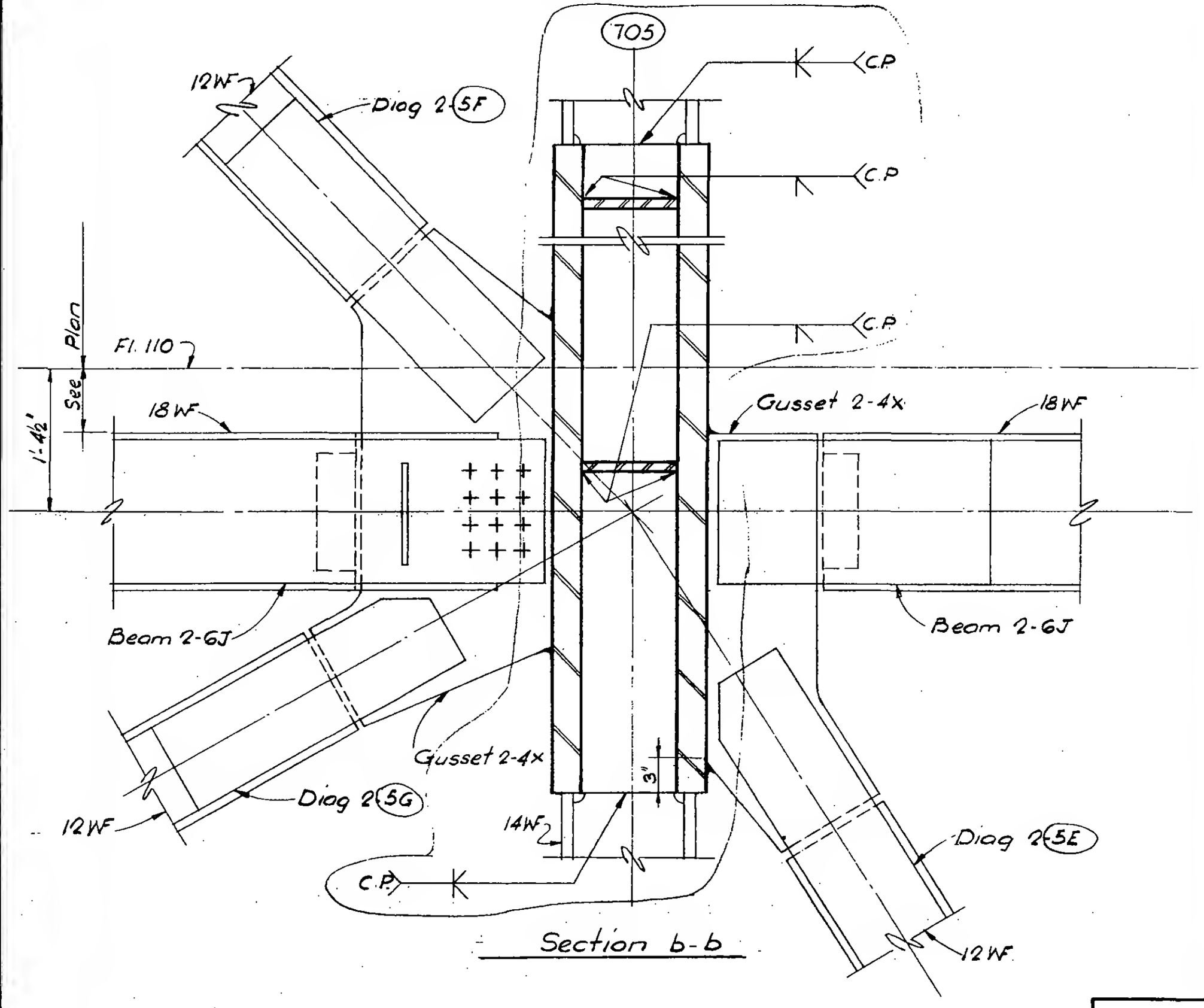

Section b-b

LICENSED PROFESSIONAL ENGINEER — LESLIE E. ROBERTSON — No. 34360 — UNIVERSITY OF THE STATE OF NEW YORK

DESIGNED

DRAWN: T. Terrelonge

REVIEWED

9. AB18-5-9.