SKILLING, HELLE, CHRISTIANSEN, ROBERTSON — Structural & Civil Engineers

PROJECT: THE WORLD TRADE CENTER | TITLE: FL 107 - PH CONNECTION DETAILS - LINE 04 & 05 | DATE: 7-10-70

REVISIONS

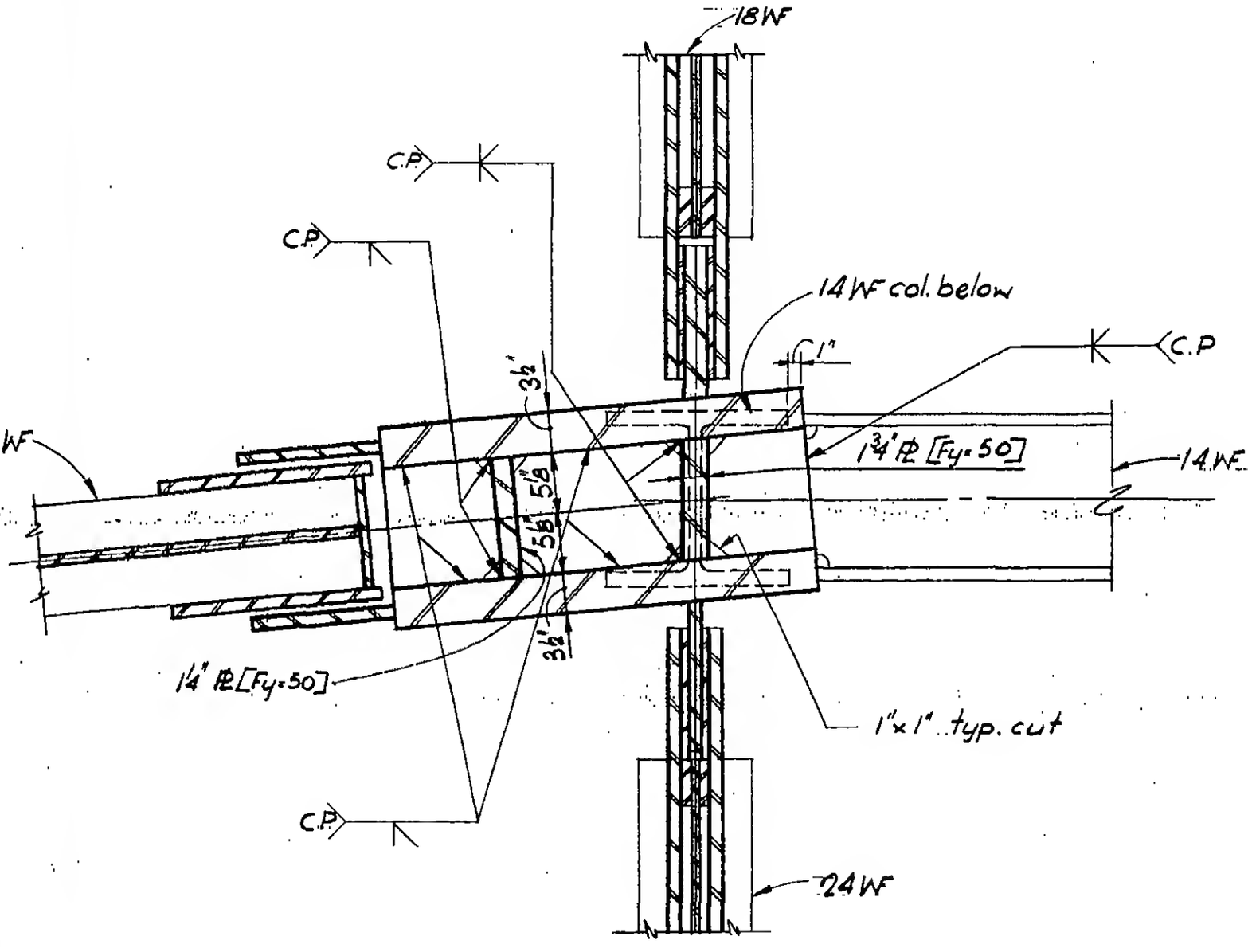

Section C-C

PLAN

LICENSED PROFESSIONAL ENGINEER — LESLIE E. ROBERTSON — No. 34360 — UNIVERSITY OF THE STATE OF NEW YORK

DESIGNED: L. Quirko

DRAWN: T. Terrelonge

REVIEWED:

9AB18-5.10