SKILLING, HELLE, CHRISTIANSEN, ROBERTSON — Structural & Civil Engineers

PROJECT THE WORLD TRADE CENTER | TITLE Fl. 107- PH CONNECTION DETAILS -LINES 04&05 | DATE 4-1-70

REVISIONS

1/8/70

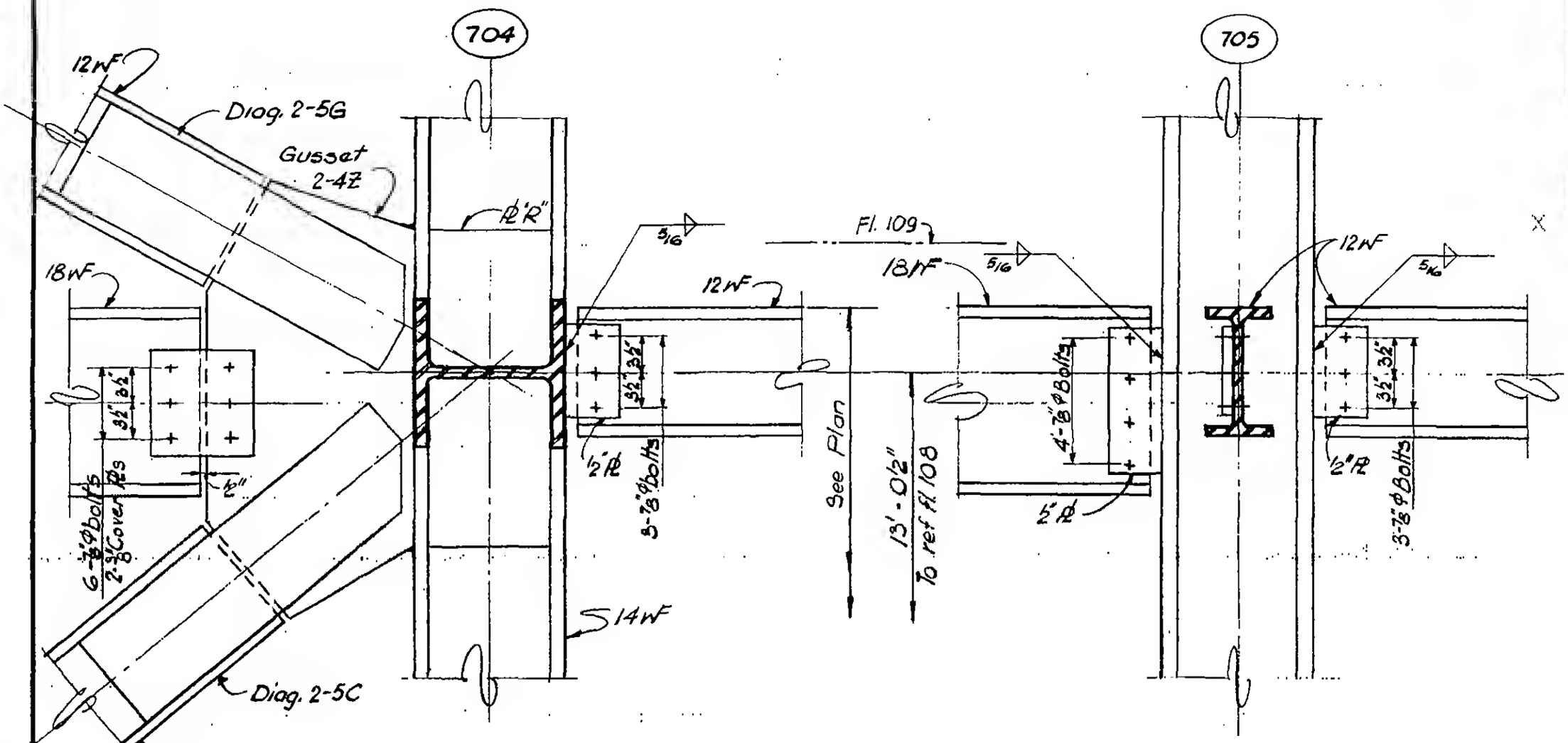

Section b-b



DESIGNED

DRAWN
D. Huggins

REVIEWED
E. Drakos

9-AB-18-5.15