SKILLING, HELLE, CHRISTIANSEN, ROBERTSON — Structural & Civil Engineers

PROJECT: THE WORLD TRADE CENTER | TITLE: FL 107 - PH CONNECTION DETAILS - LINES 04 & 05 | DATE: 4 - 1 - 70

REVISIONS

6-22-70

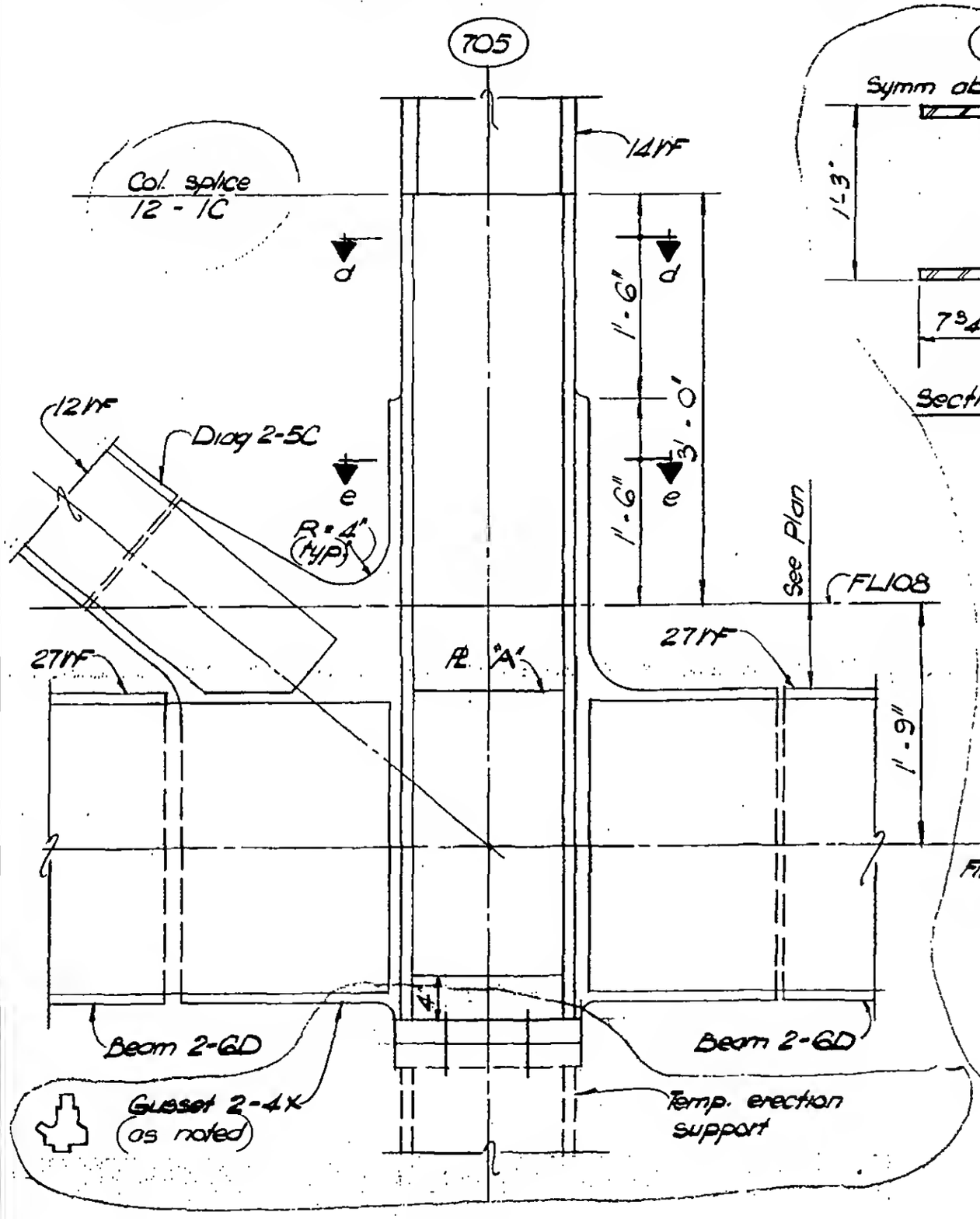

Section c - c

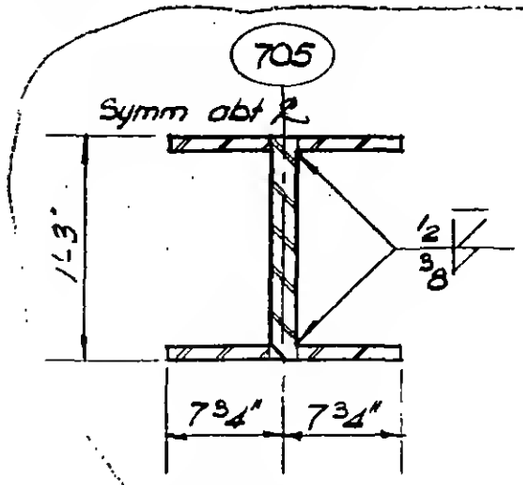

Section d - d

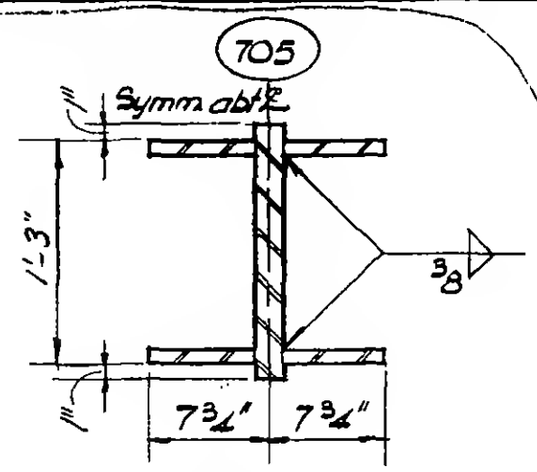

Section e - e

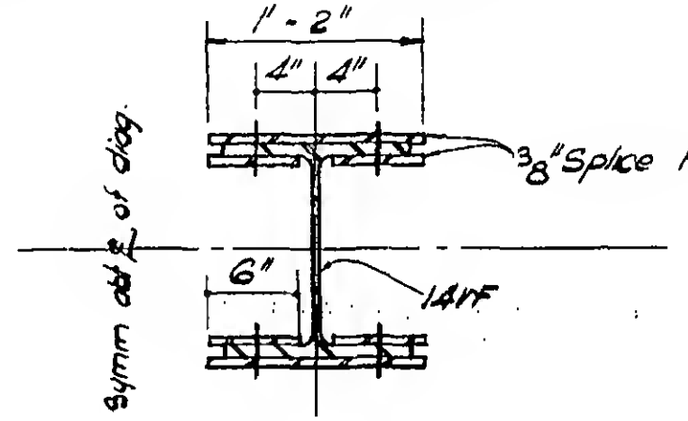

Section f - f

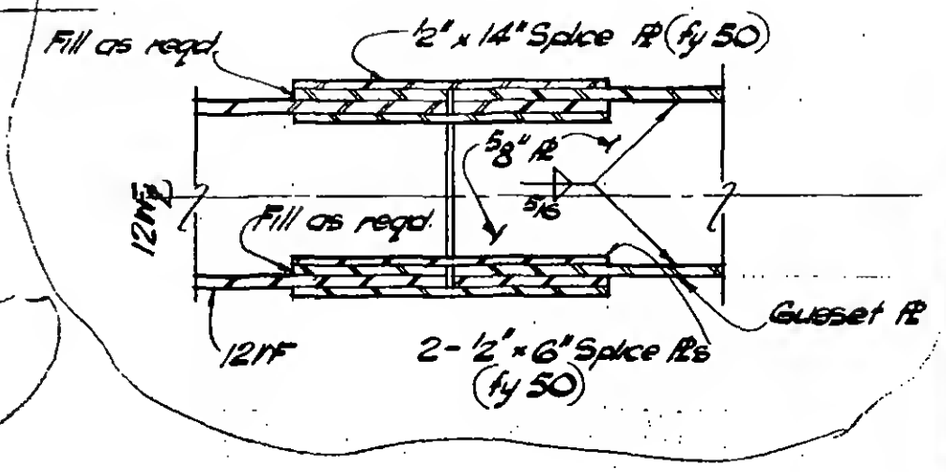

Section g - g

LICENSED PROFESSIONAL ENGINEER
LESLIE E. ROBERTSON
No. 34360
UNIVERSITY OF THE STATE OF NEW YORK

DESIGNED

DRAWN
W. Clarke

REVIEWED