SKILLING, HELLE, CHRISTIANSEN, ROBERTSON — Structural & Civil Engineers

PROJECT: THE WORLD TRADE CENTER | TITLE: FL 107-PH CONNECTION DETAILS - LINES 04 & 05 | DATE: 6-22-70

REVISIONS

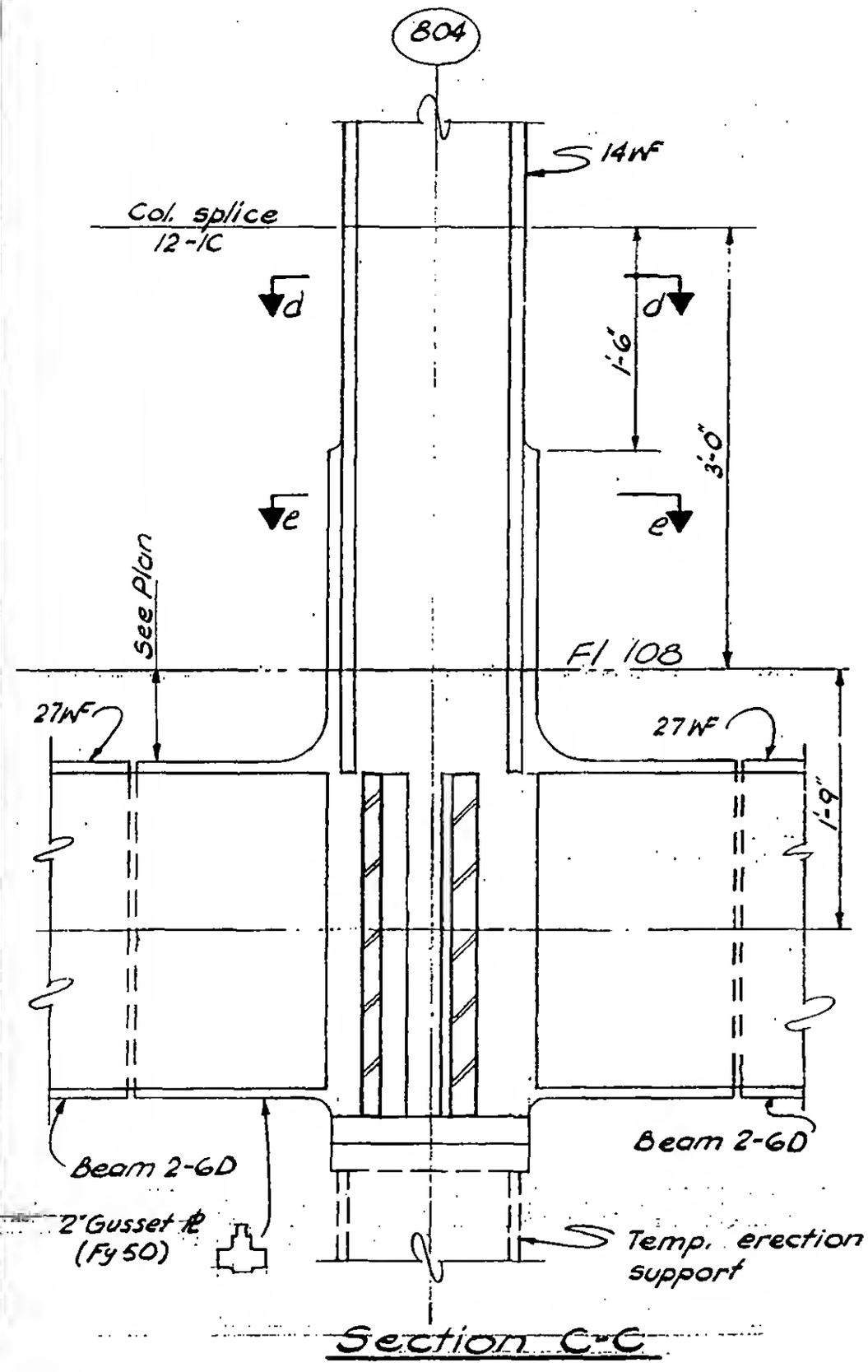

Section C-C

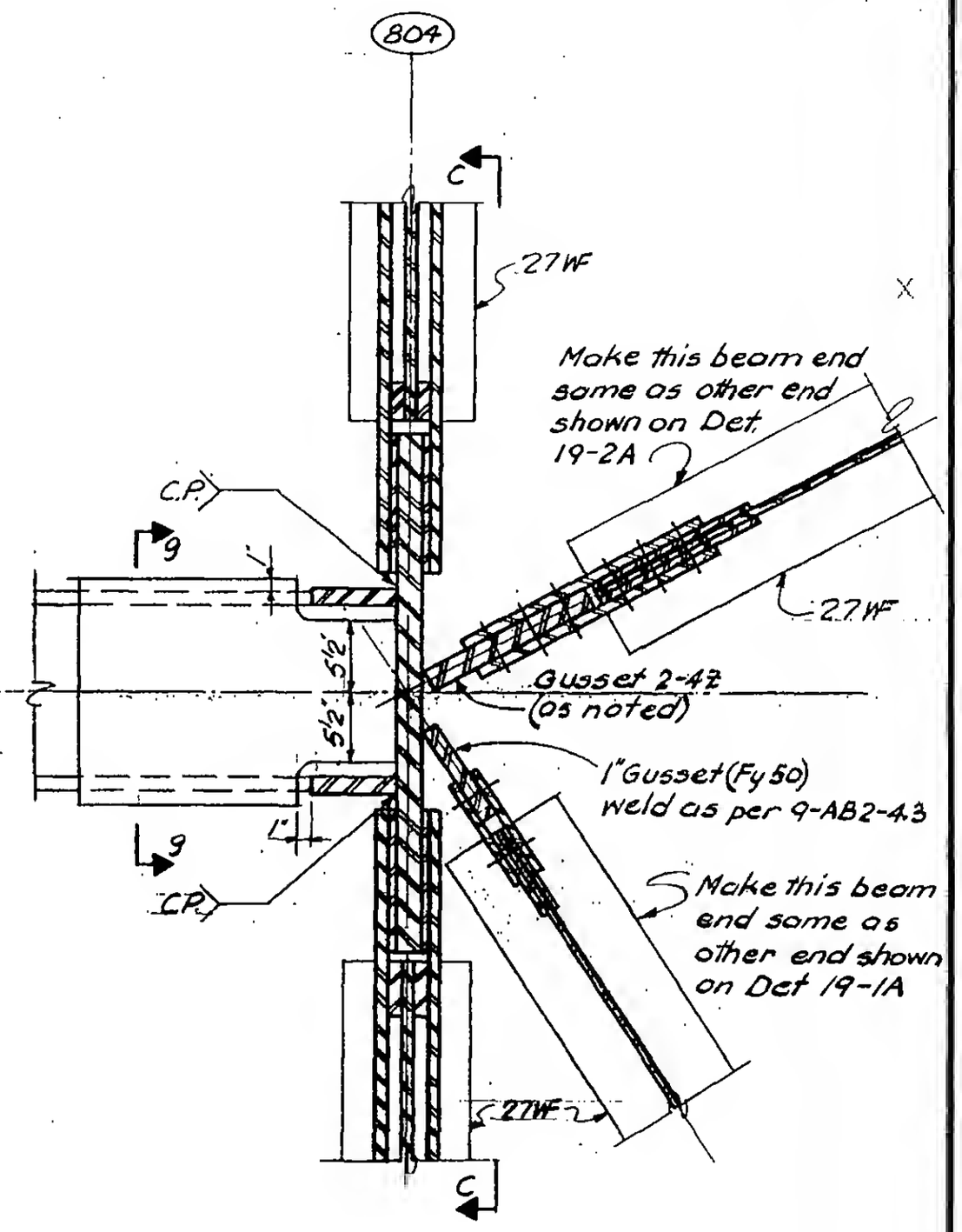

Section b-b

LICENSED PROFESSIONAL ENGINEER — LESLIE E. ROBERTSON — No. 34360 — UNIVERSITY OF THE STATE OF NEW YORK

DESIGNED

DRAWN: D. Huggins

REVIEWED

9-AB18-6.17