SKILLING, HELLE, CHRISTIANSEN, ROBERTSON — Structural & Civil Engineers

PROJECT: THE WORLD TRADE CENTER | TITLE: FL 107 - PH CONNECTION DETAILS - LINES 04 & 05 | DATE: 6-22-70

REVISIONS

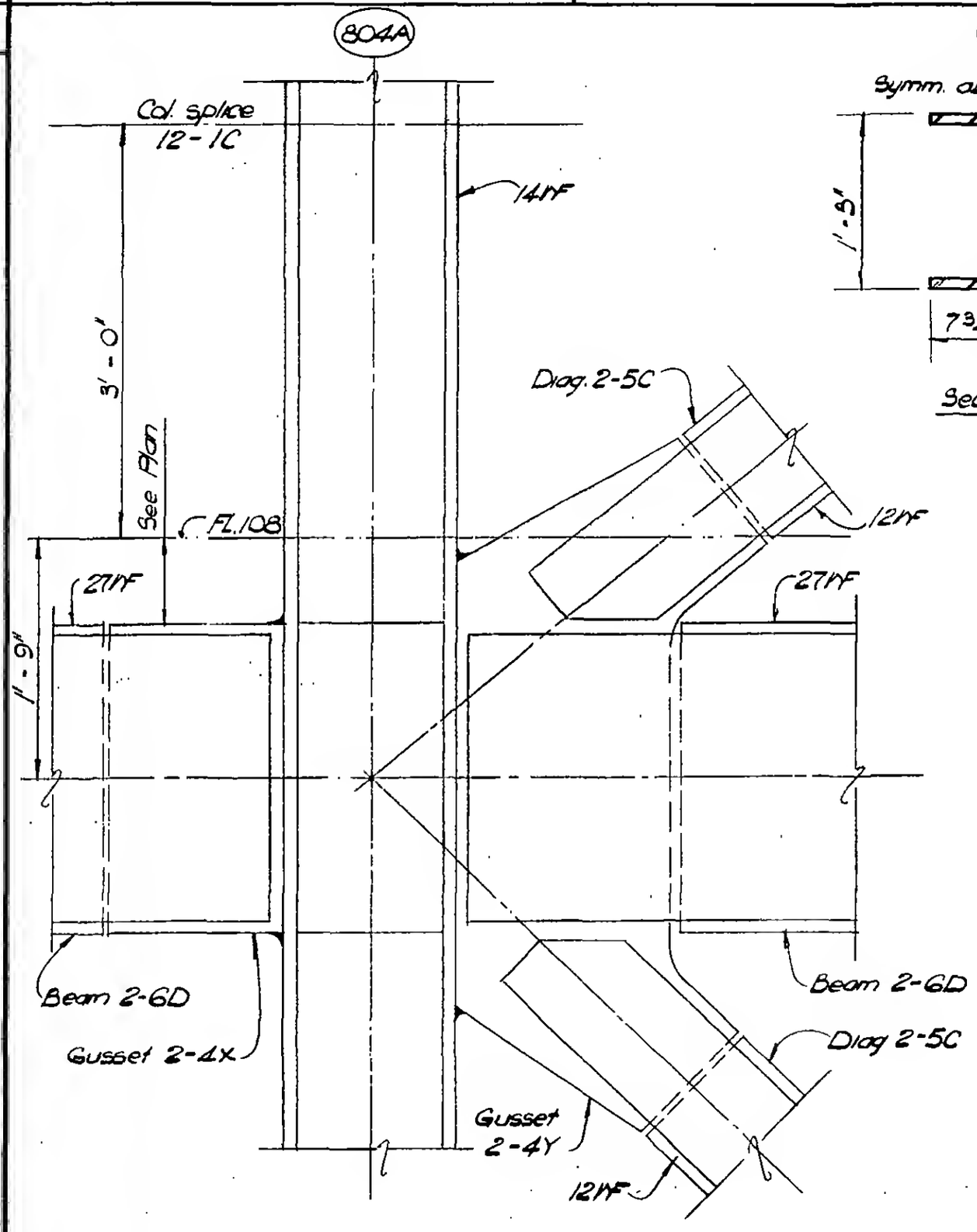

Section a-a

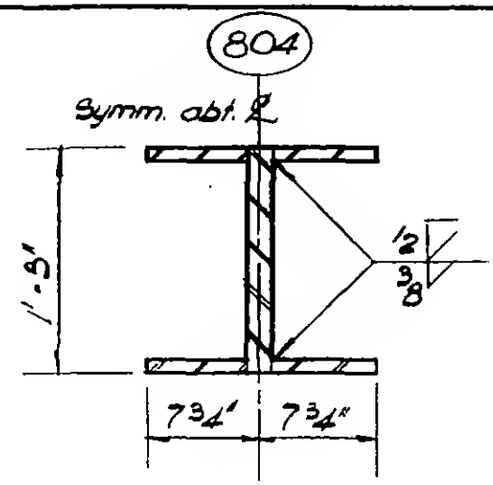

Section d-d

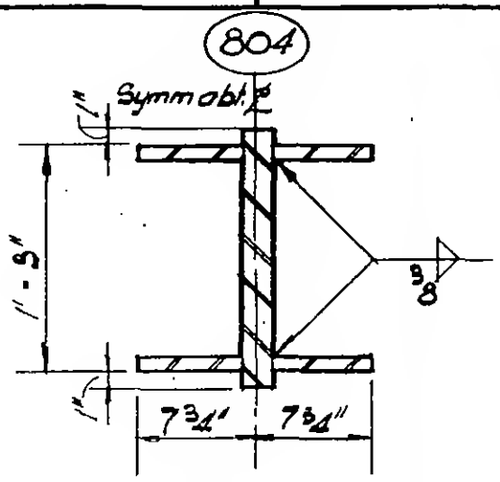

Section e-e

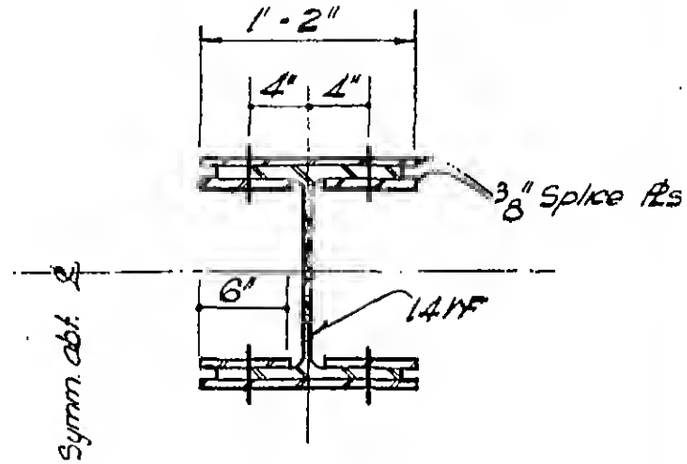

Section f-f

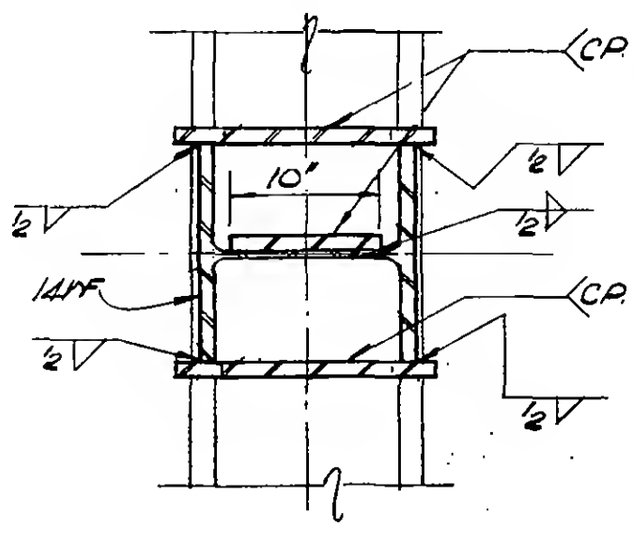

Section g-g

LICENSED PROFESSIONAL ENGINEER
LESLIE E. ROBERTSON
No. 34960
UNIVERSITY OF THE STATE OF NEW YORK

DESIGNED

DRAWN
M. Clarke

REVIEWED

9-AB18-6:18