SKILLING, HELLE, CHRISTIANSEN, ROBERTSON — Structural & Civil Engineers

PROJECT: THE WORLD TRADE CENTER | TITLE: FL 107-PH CONNECTION DETAILS - FL 108 | DATE: 4-1-70

REVISIONS

5-27-70

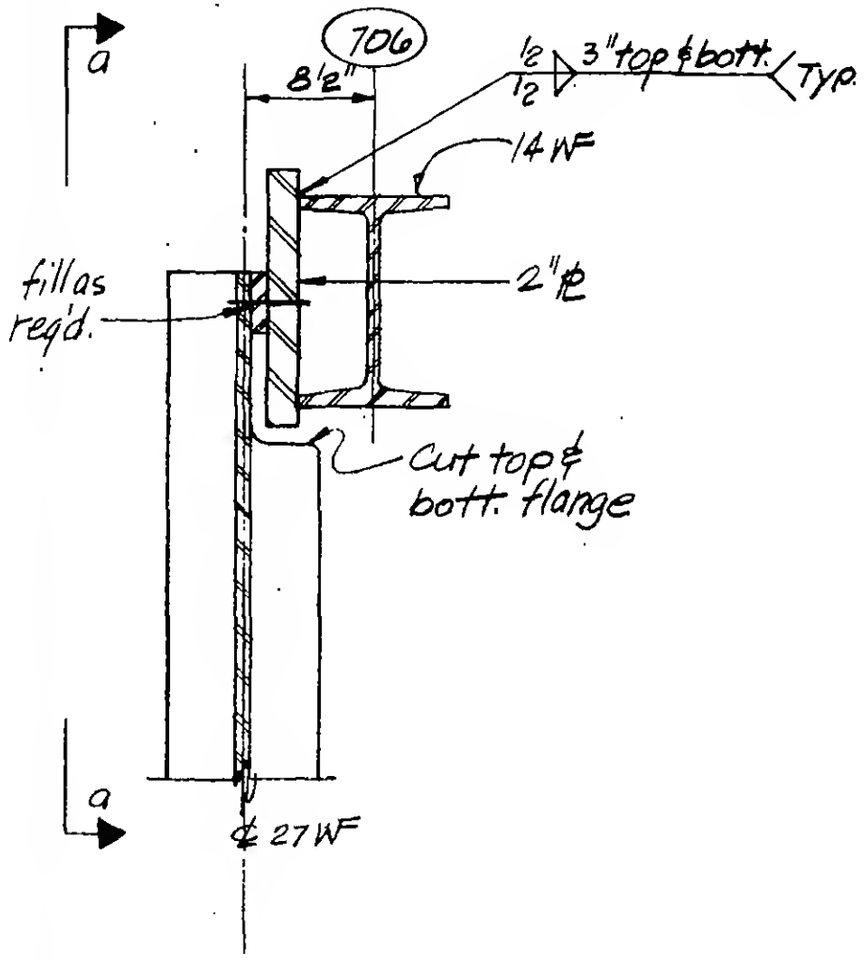

Plan

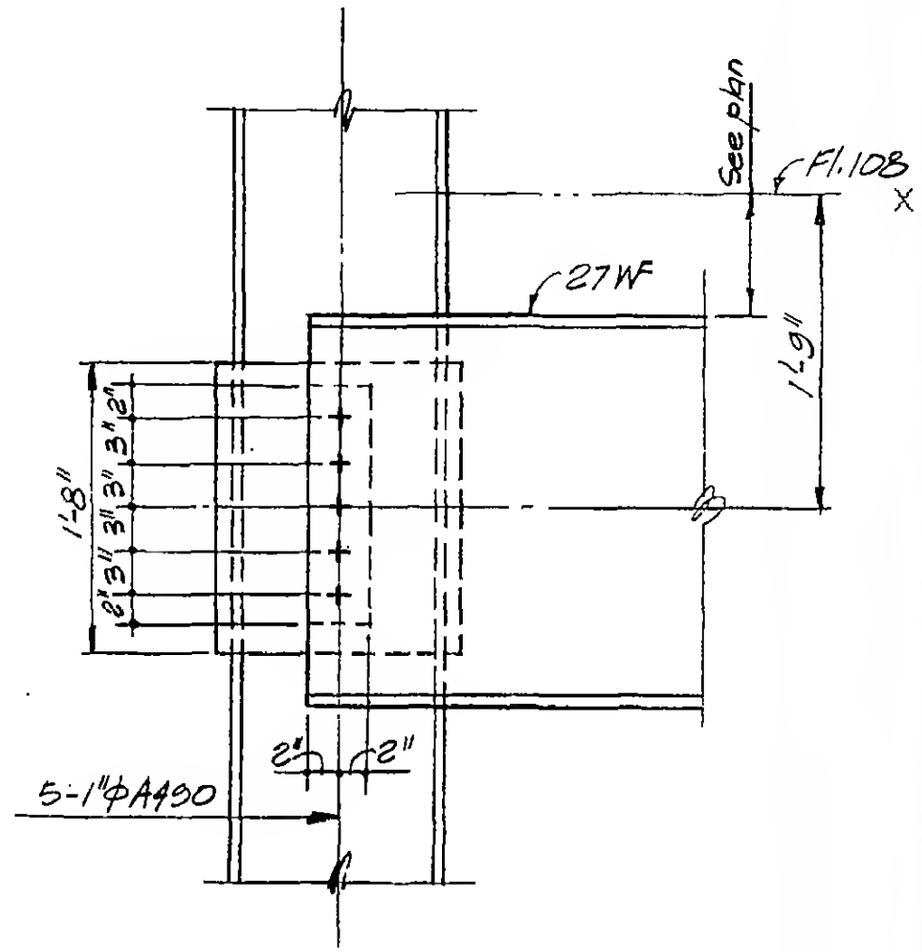

Section a-a

DETAIL 19-2B

LICENSED PROFESSIONAL ENGINEER — LESLIE E. ROBERTSON — No. 34960 — UNIVERSITY OF THE STATE OF NEW YORK

DESIGNED: L. Quirko

DRAWN: P. Ozcki

REVIEWED: E. Drakos

9-AB19-2.3