SKILLING, HELLE, CHRISTIANSEN, ROBERTSON — Structural & Civil Engineers

PROJECT: THE WORLD TRADE CENTER

TITLE: FLOOR 107-PH CONNECTION DETAILS - EL 710

DATE: 4-1-70

REVISIONS

6-15-70

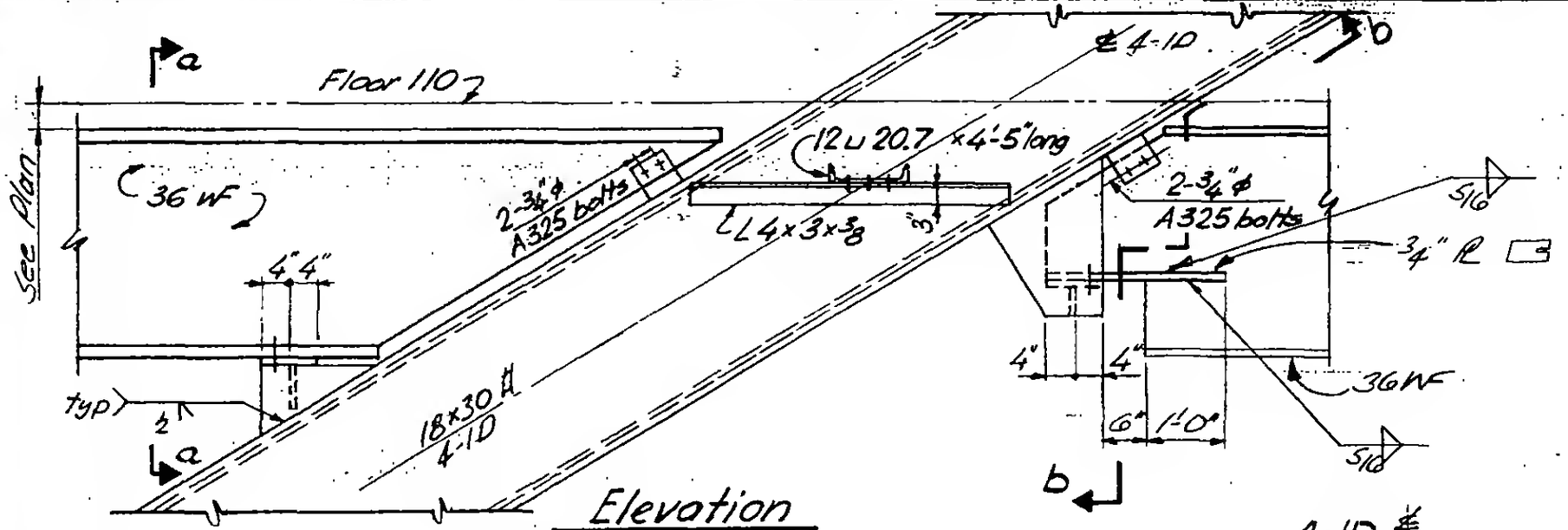

Elevation

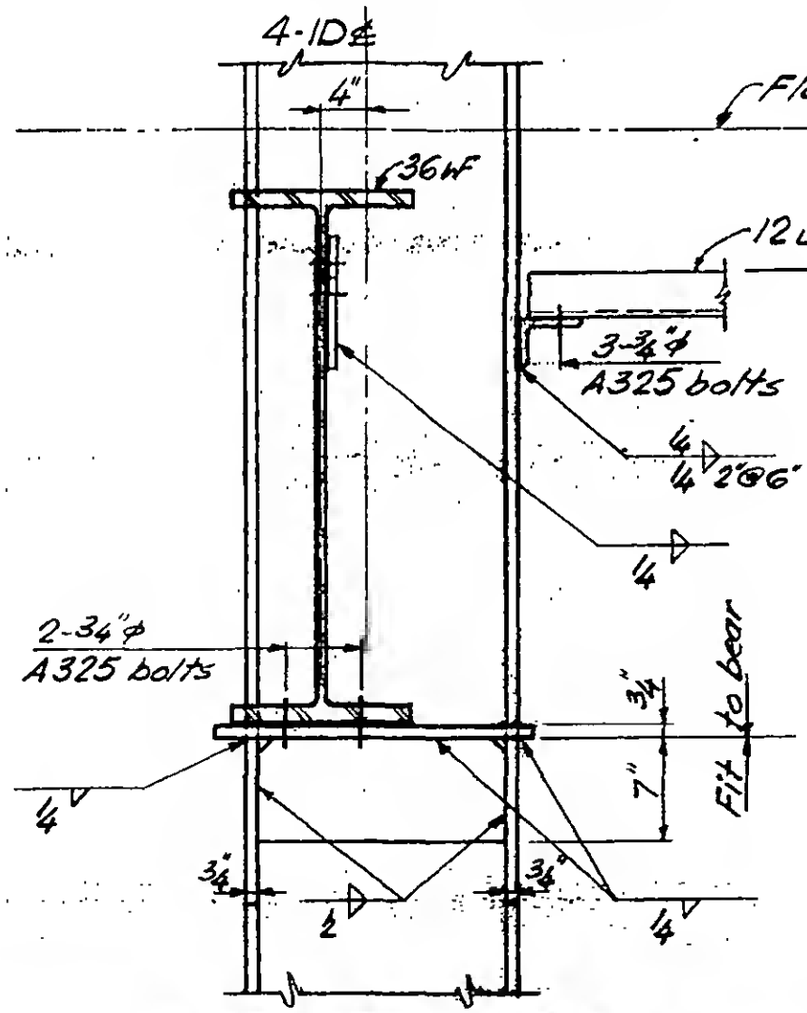

Section a-a

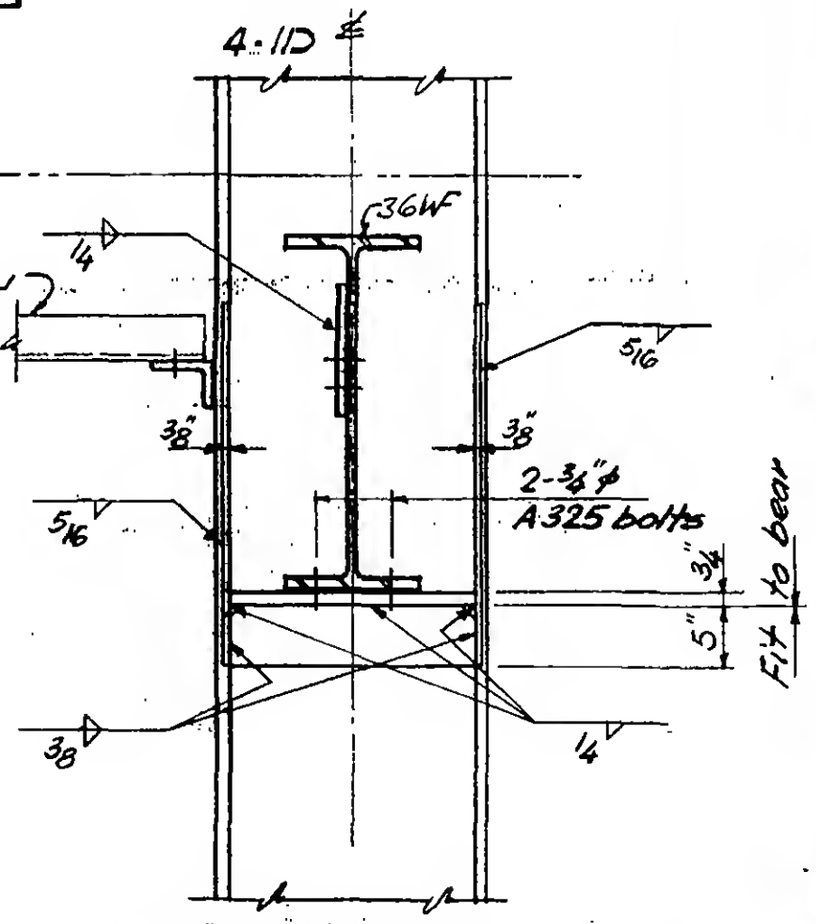

Section b-b

DESIGNED

DRAWN: J. Grlcius

REVIEWED: E. Drakos

9-AB19-3