SKILLING, HELLE, CHRISTIANSEN, ROBERTSON — Structural & Civil Engineers

PROJECT: THE WORLD TRADE CENTER | TITLE: FL 107 - PH CONNECTION DETAILS | DATE: 6 - 15 - 70

REVISIONS

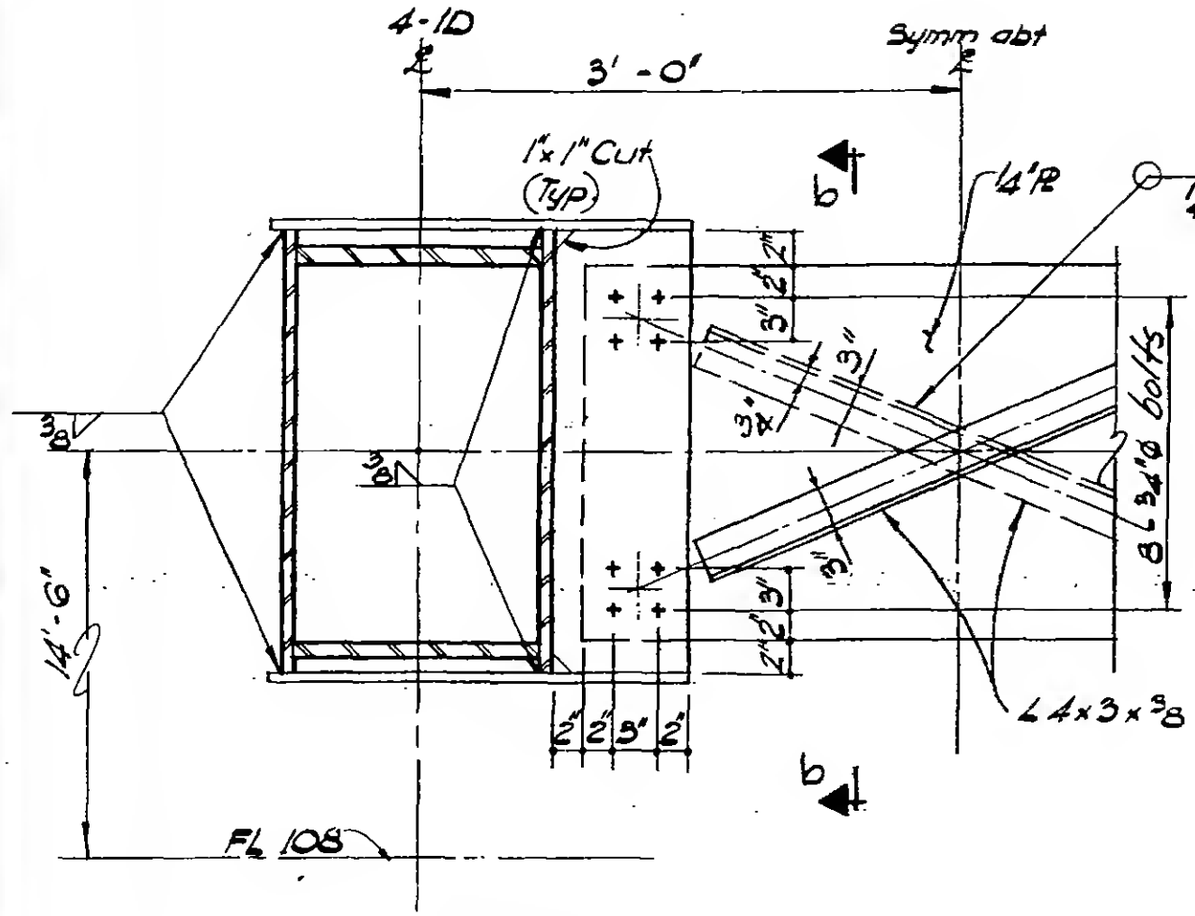

Section a-a

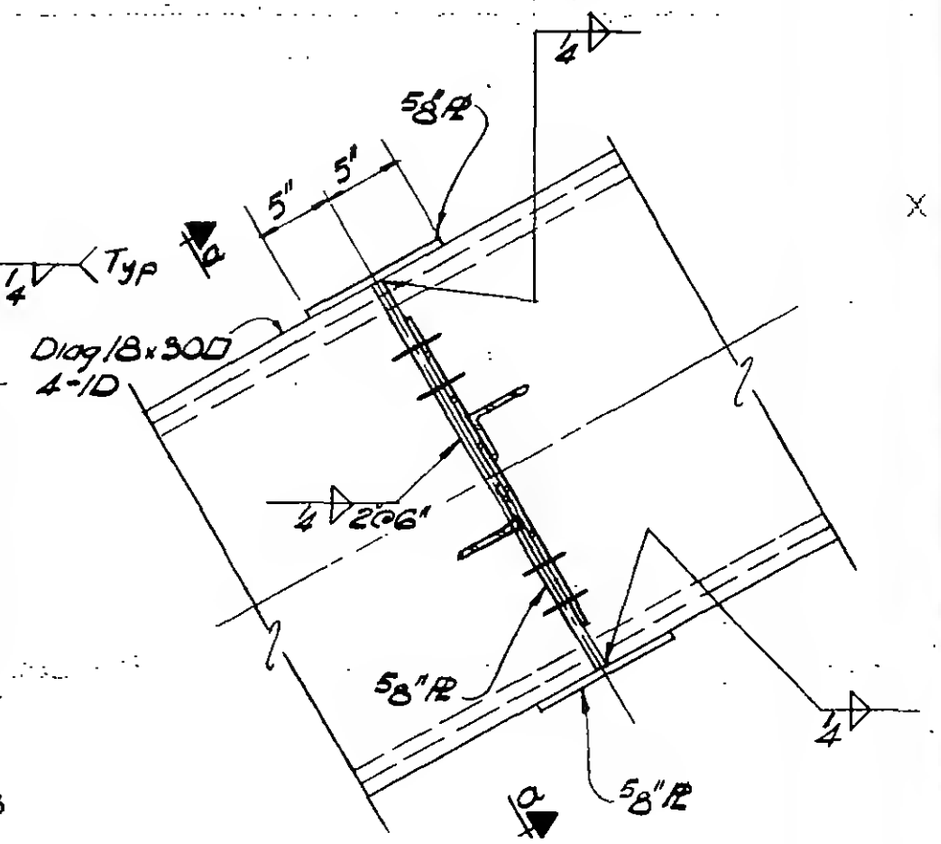

Section b-b

DETAIL 19-6

DESIGNED: J. Bell
DRAWN: W. Clarke
REVIEWED: E. Drakos

LICENSED PROFESSIONAL ENGINEER — LESLIE E. ROBERTSON — No. 34860 — UNIVERSITY OF THE STATE OF NEW YORK

9-AB19-6