SKILLING, HELLE, CHRISTIANSEN, ROBERTSON — Structural & Civil Engineers

PROJECT THE WORLD TRADE CENTER | TITLE Fl. 107-PH, CONNECTION DETAIL - PH ROOF | DATE 4-1-70

REVISIONS

VOID 6-18-70
~~9-25-70~~
6-18-70

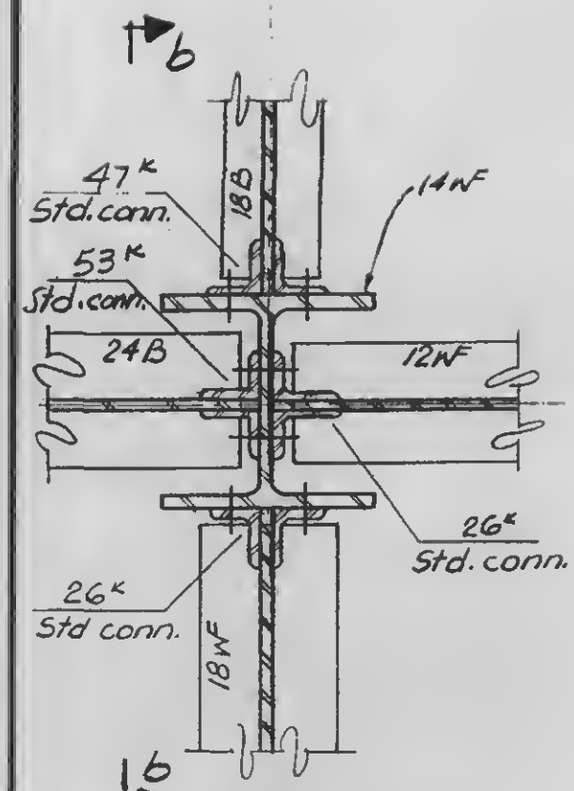

Detail 20-1C

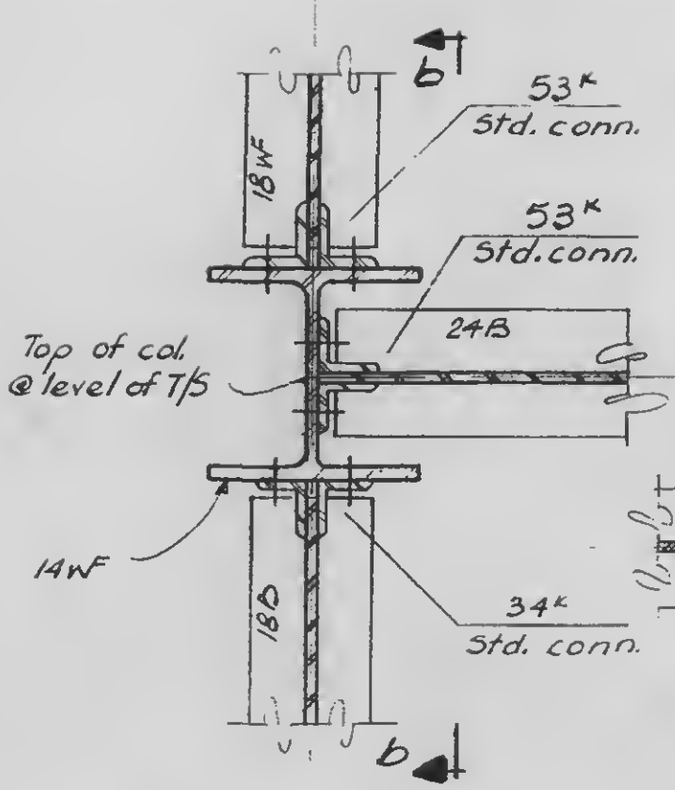

DETAIL 20-1D

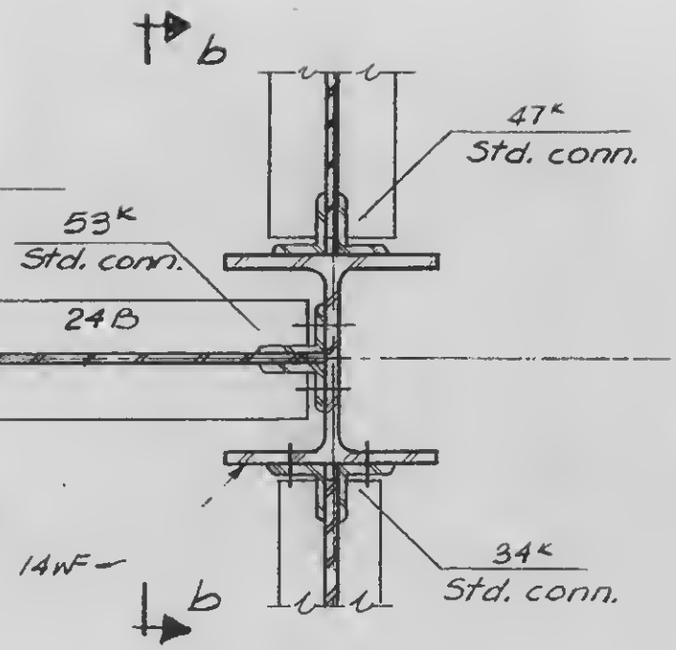

DETAIL 20-1E

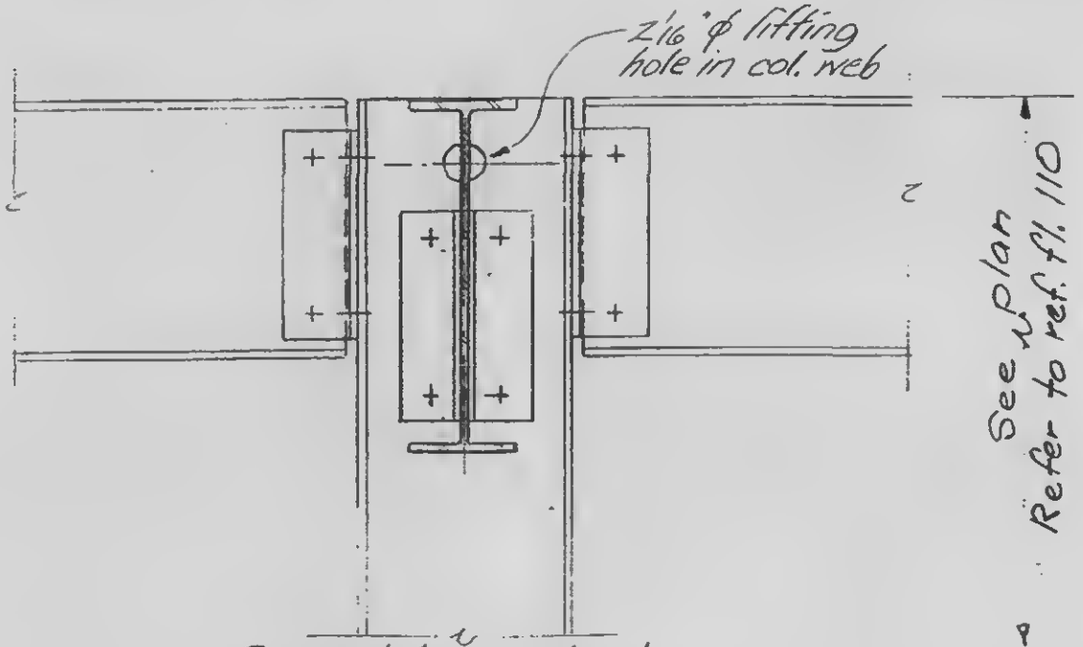

Section b-b

LICENSED PROFESSIONAL ENGINEER
LESLIE E. ROBERTSON
No. 34360
UNIVERSITY OF THE STATE OF NEW YORK

DESIGNED

DRAWN
D. Huggins

REVIEWED

9-AB 20-1.2.