SKILLING, HELLE, CHRISTIANSEN, ROBERTSON — Structural & Civil Engineers

PROJECT: THE TRADE WORLD CENTER | TITLE: FL. 107 P.H. CONNECTION DETAILS - PH ROOF | DATE: 4-1-70

REVISIONS

6/18/70

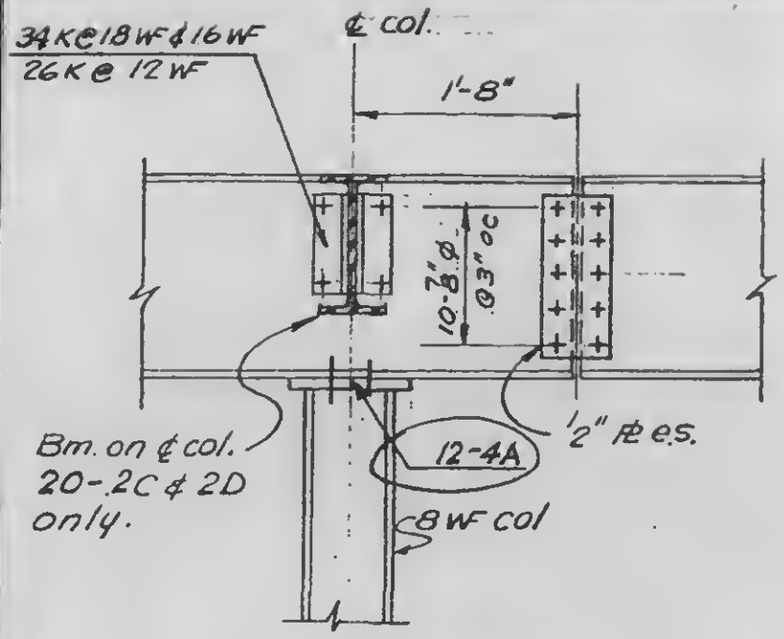

Detail 20-2A

Detail 20-2C & 2D as noted

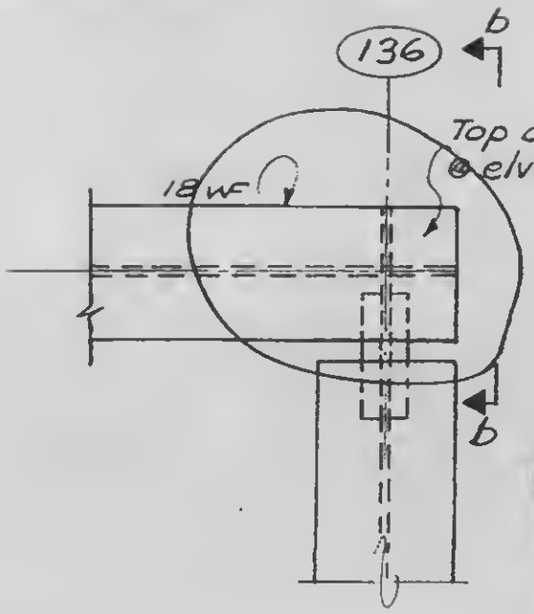

Detail 20-2B

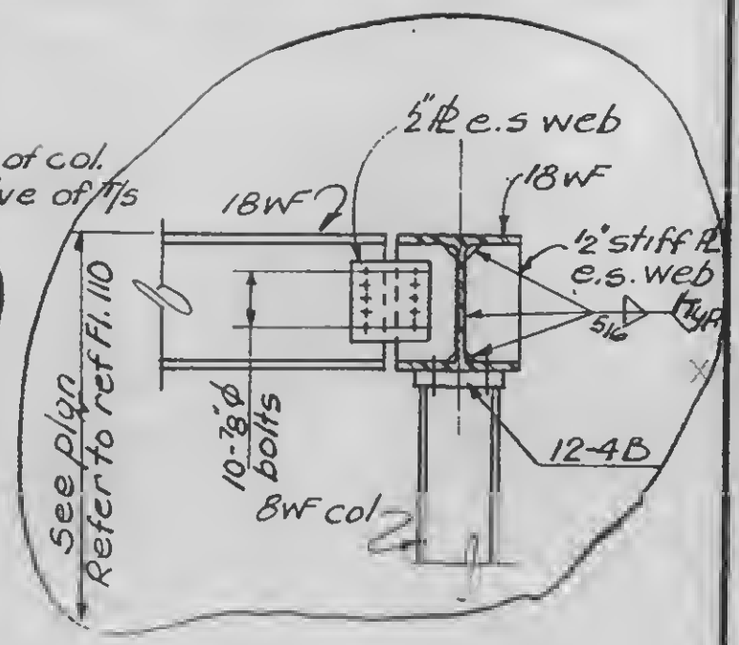

Section b-b

LICENSED PROFESSIONAL ENGINEER
LESLIE E. ROBERTSON
No. 34360
UNIVERSITY OF THE STATE OF NEW YORK

DESIGNED

DRAWN
V. H. A

REVIEWED

9-AB20-2