SKILLING, HELLE, CHRISTIANSEN, ROBERTSON — Structural & Civil Engineers

PROJECT THE WORLD TRADE CENTER | TITLE FL 107-PH CONNECTION DETAILS - PH ROOF | DATE 4-1-70

REVISIONS

8-20-70

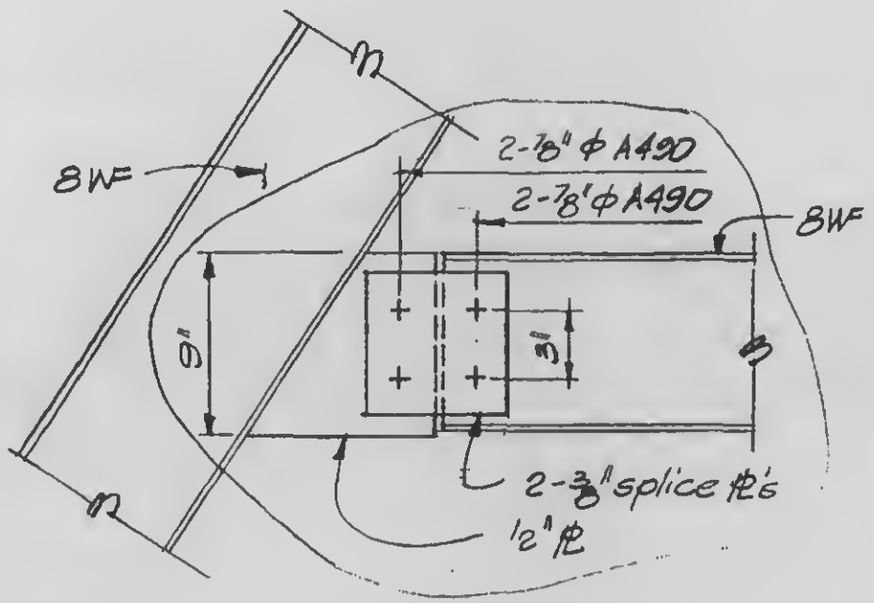

Detail 20-4Q

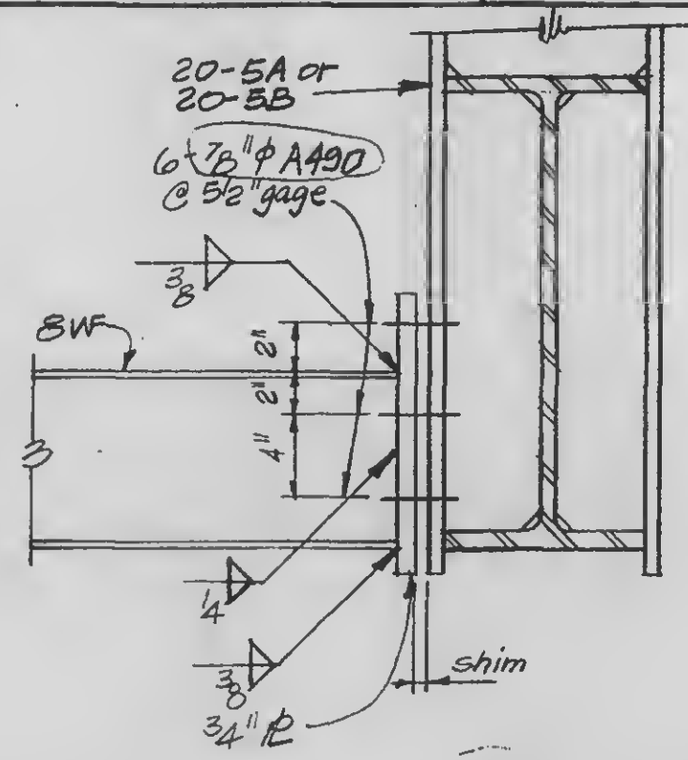

Detail 20-4R

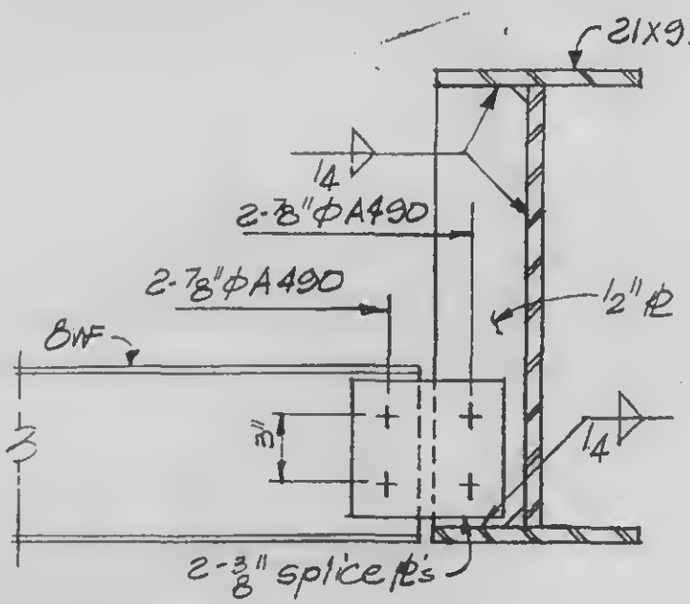

Detail 20-4S

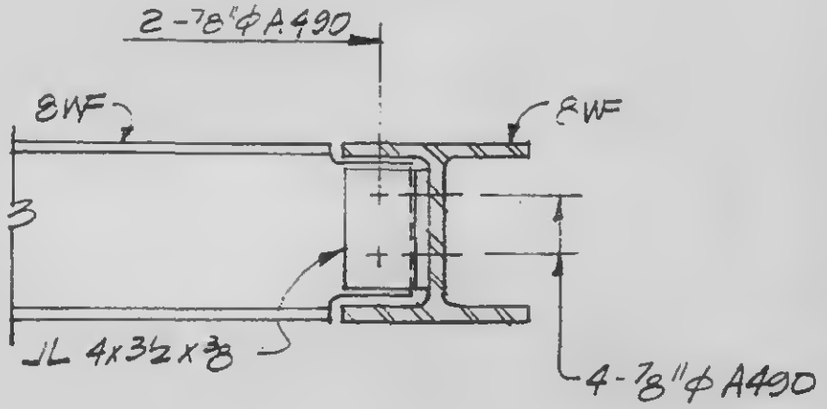

Detail 20-4T

LICENSED PROFESSIONAL ENGINEER
LESLIE E. ROBERTSON
No. 34360
UNIVERSITY OF THE STATE OF NEW YORK

DESIGNED

DRAWN C. Zelpi

REVIEWED

9-AB20-4.8