SKILLING, HELLE, CHRISTIANSEN, ROBERTSON — Structural & Civil Engineers

PROJECT THE WORLD TRADE CENTER | TITLE FL 107-PH CONNECTION DETAILS PER ROOF | DATE 8-20-70

REVISIONS

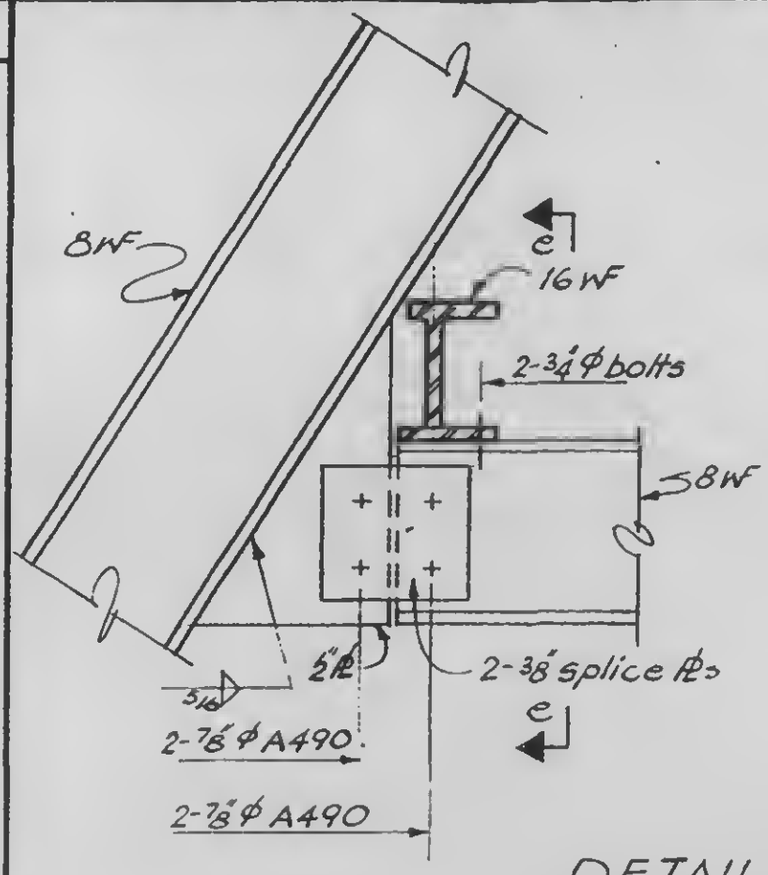

DETAIL 20-4 U

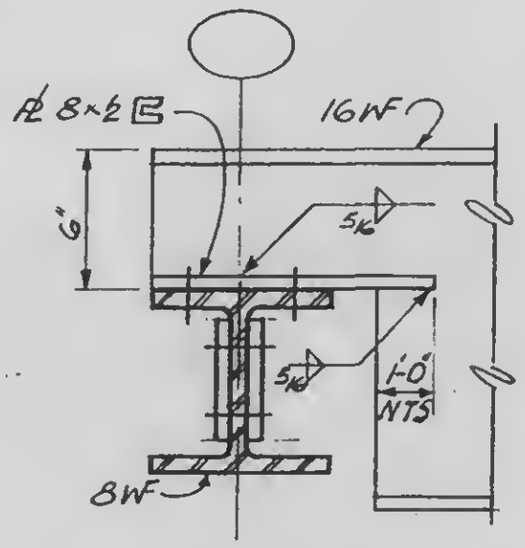

Section e-e

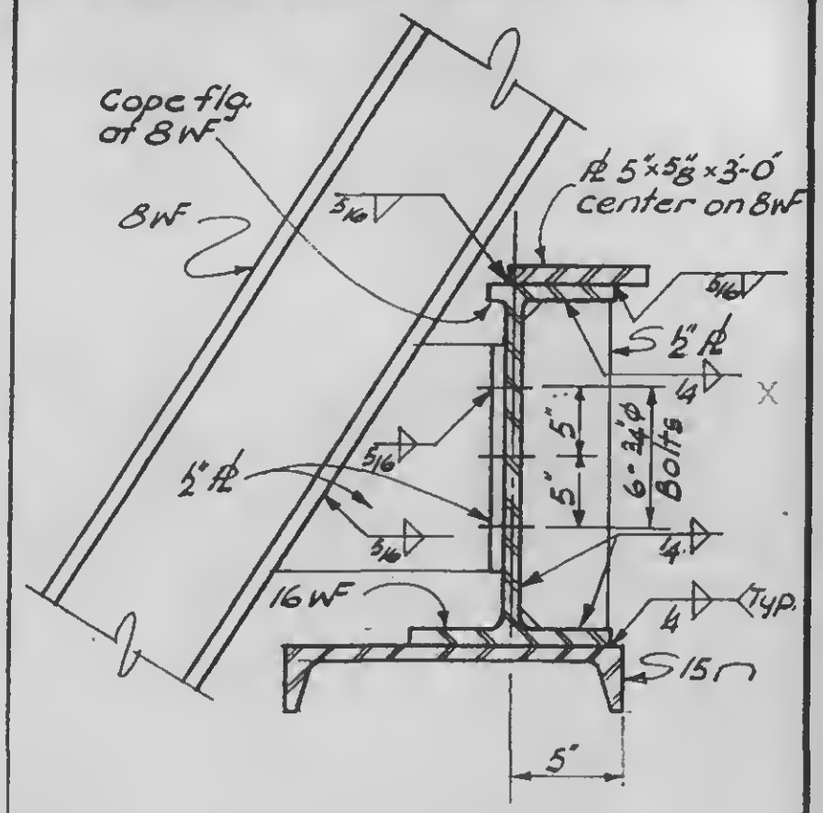

DETAIL 20-4 W

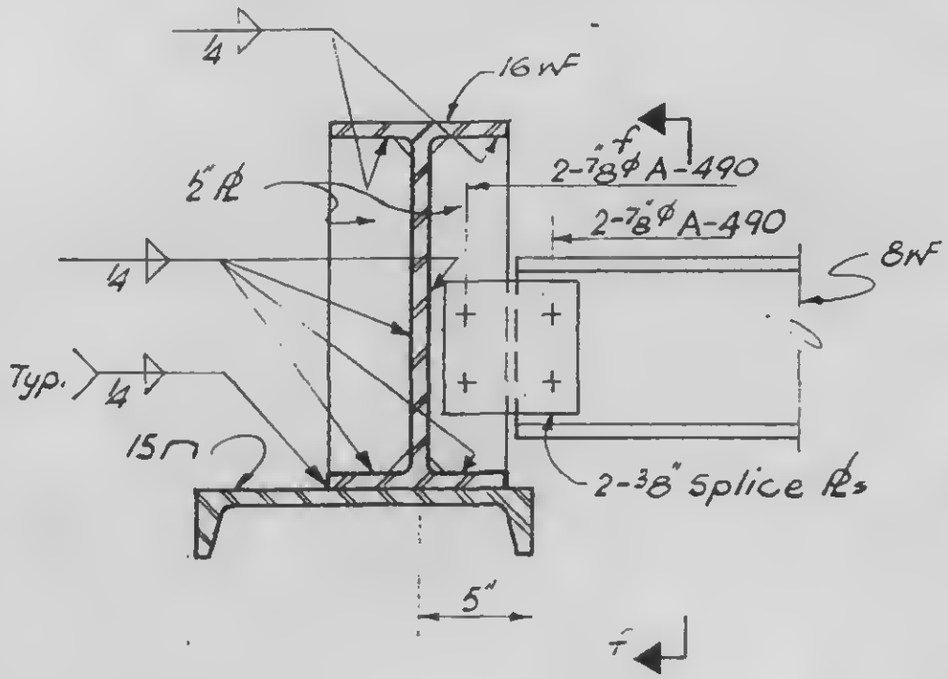

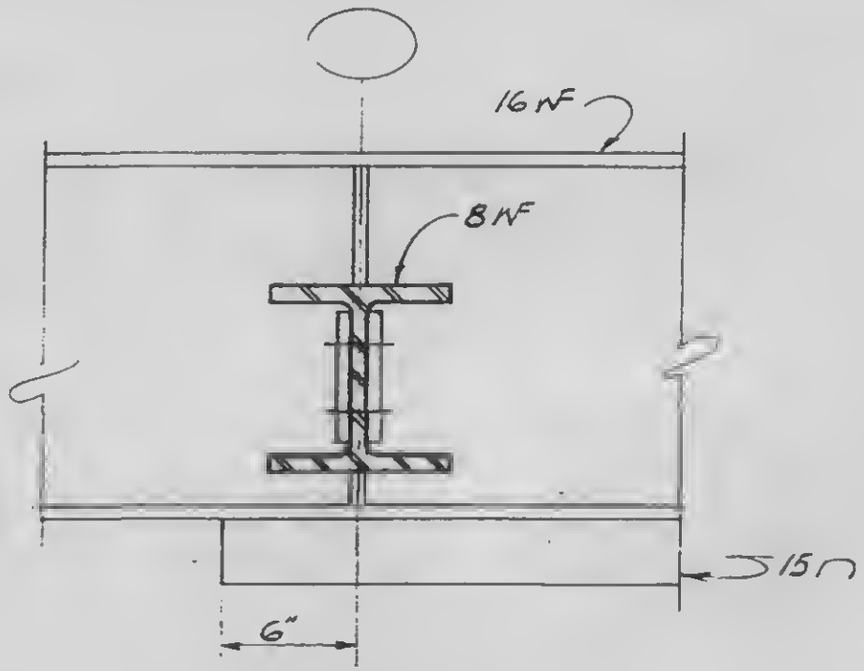

Section f-f

DETAIL 20-4V

LICENSED PROFESSIONAL ENGINEER LESLIE E. ROBERTSON No. 34360 UNIVERSITY OF THE STATE OF NEW YORK

DESIGNED

DRAWN D. Huggins

REVIEWED

9-AB20-4.9