SKILLING, HELLE, CHRISTIANSEN, ROBERTSON — Structural & Civil Engineers

PROJECT THE WORLD TRADE CENTER | TITLE EL.107-PH, CONNECTION DETAILS-PH ROOF | DATE 4-1-70

REVISIONS

6-18-70

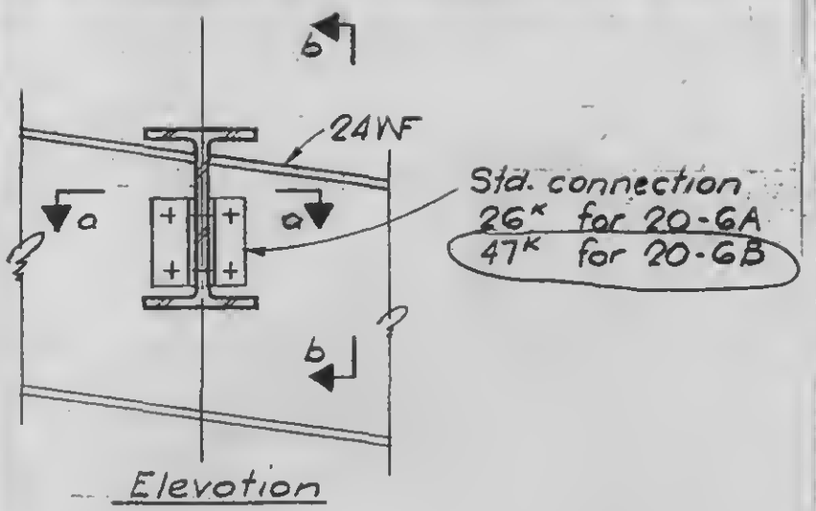

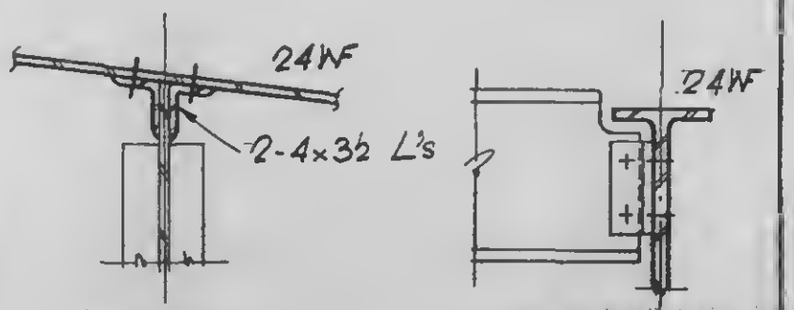

DETAIL 20-6A & 20-6B

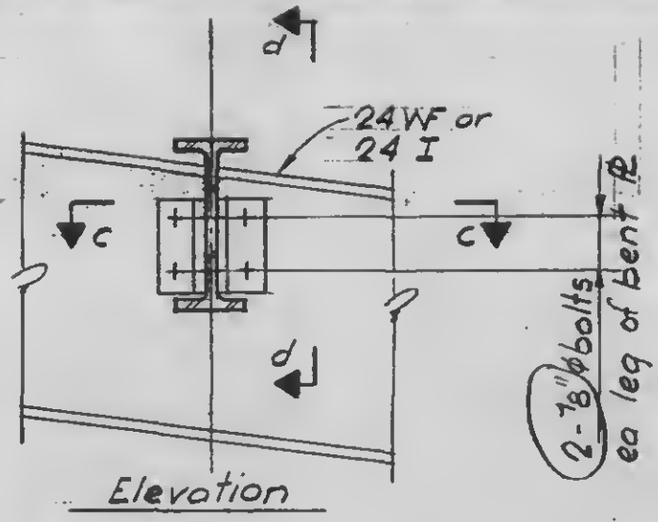

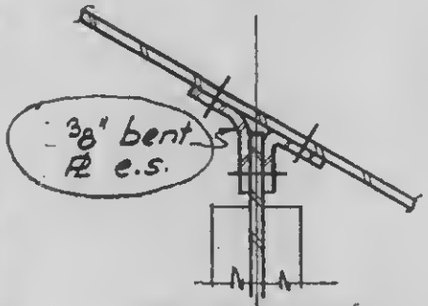

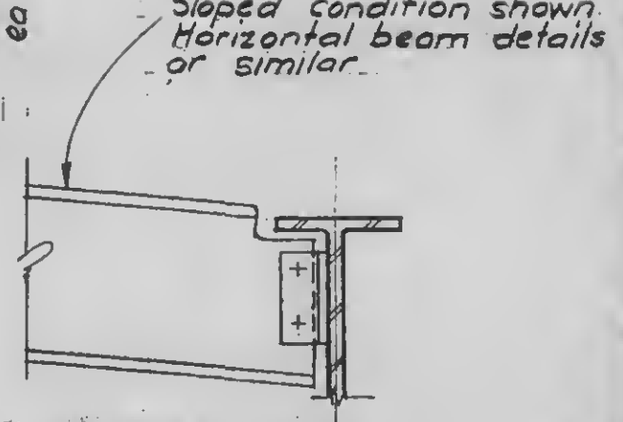

DETAIL 20-6C & 20-6D

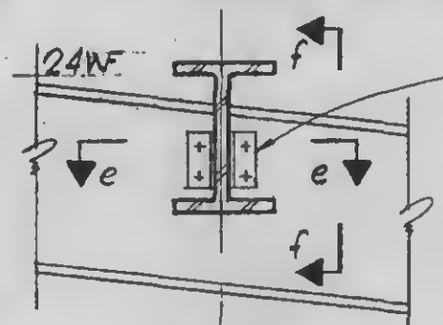



DETAIL 20-6E

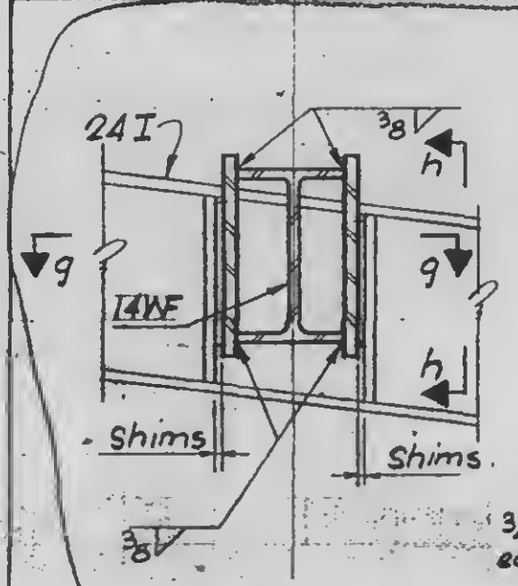

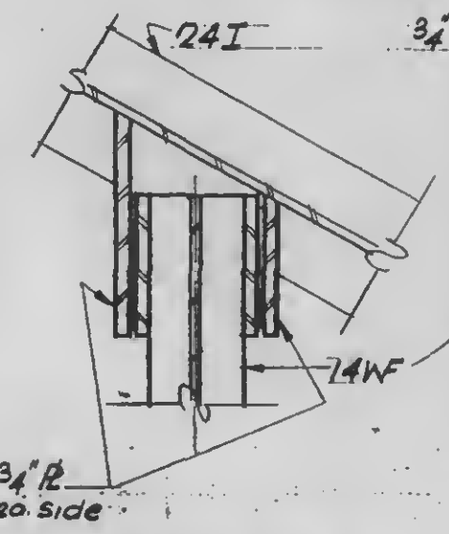

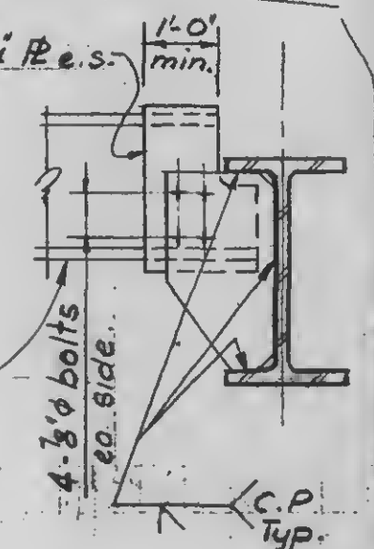

DETAIL 20-6F

9-AB20-6

LICENSED PROFESSIONAL ENGINEER
LESLIE E. ROBERTSON
No. 34360
UNIVERSITY OF THE STATE OF NEW YORK

DESIGNED

DRAWN
T. Terrelonge

REVIEWED