SKILLING, HELLE, CHRISTIANSEN, ROBERTSON — Structural & Civil Engineers

PROJECT [illegible] — TITLE [illegible] 107-PH, CONNECTION DETAILS - PIT ROOF — DATE 12/[illegible]

REVISIONS
9/27/71

DESIGNED

DRAWN
S.C.

REVIEWED

LICENSED PROFESSIONAL ENGINEER
LESLIE E. ROBERTSON
No. 34360
UNIVERSITY OF THE STATE OF NEW YORK

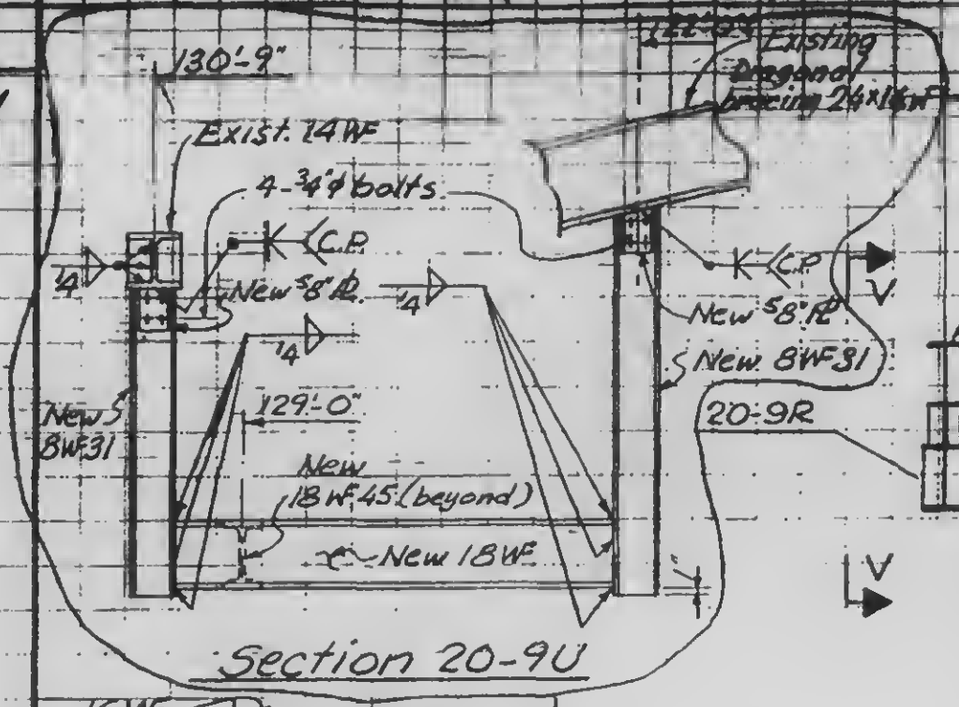

Section 20-9U

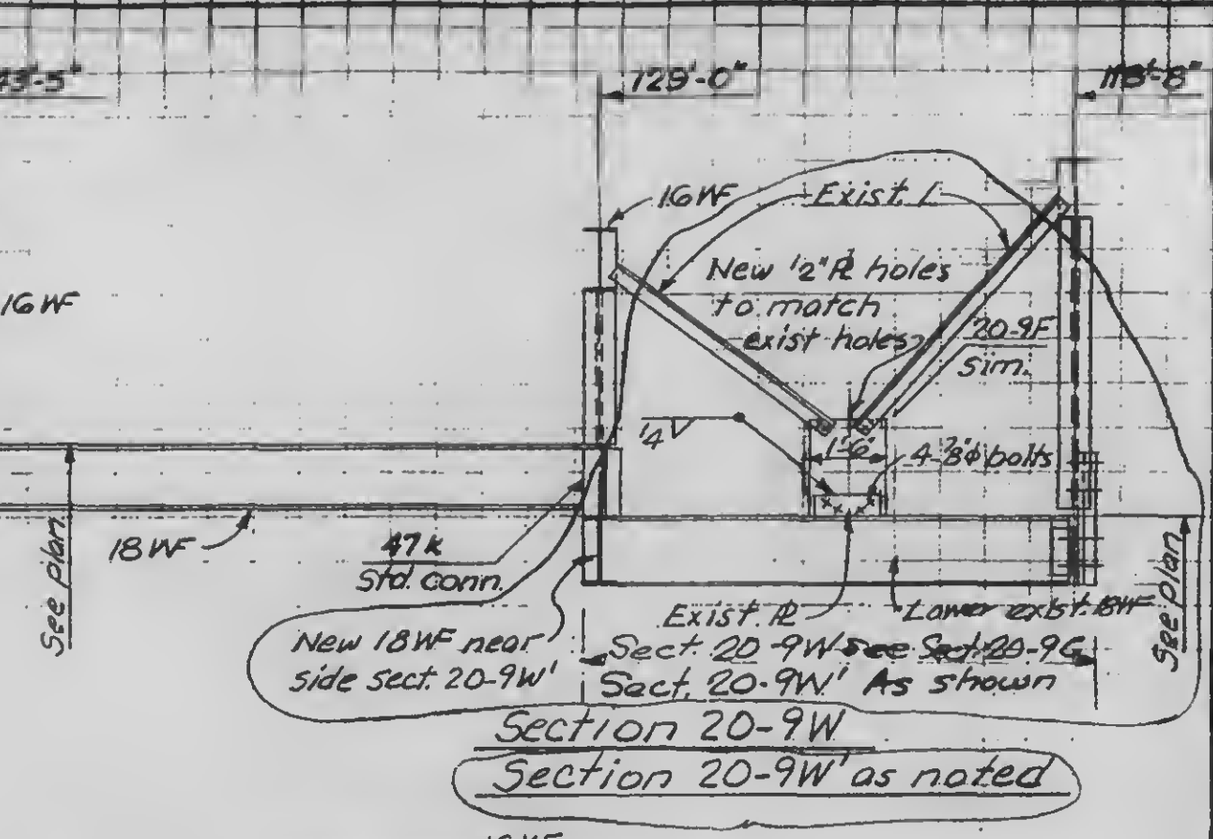

Section 20-9W

Section 20-9W' as noted

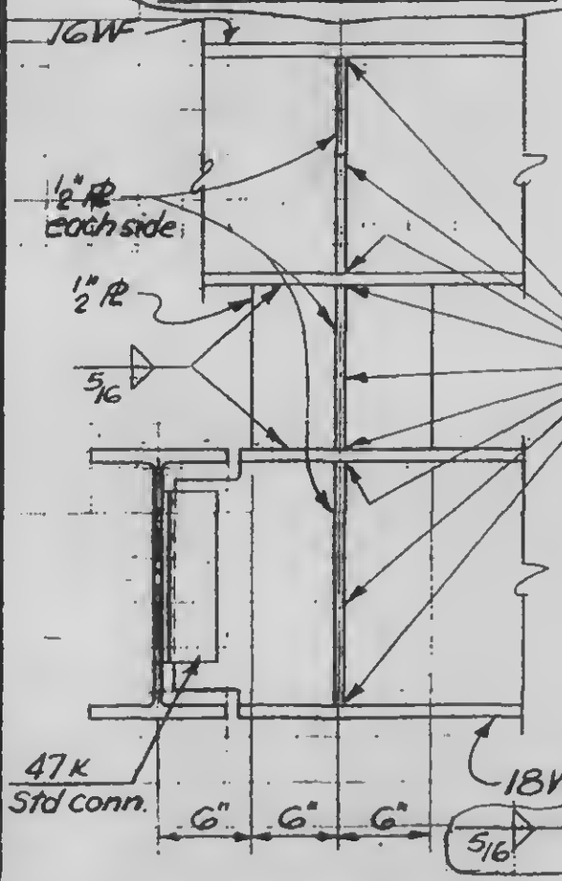

Detail 20-9R

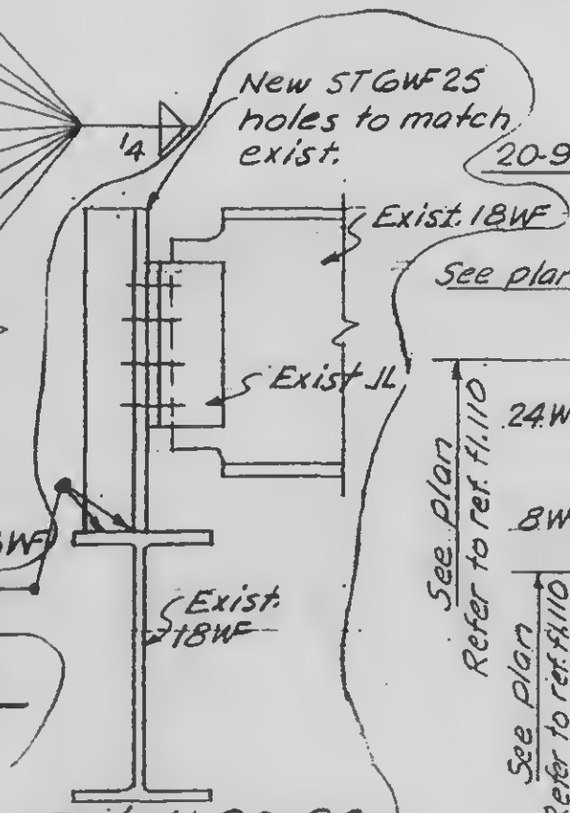

Detail 20-9S

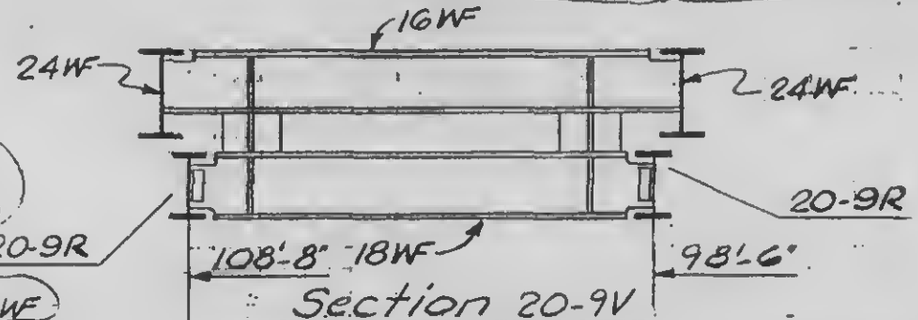

Section 20-9V

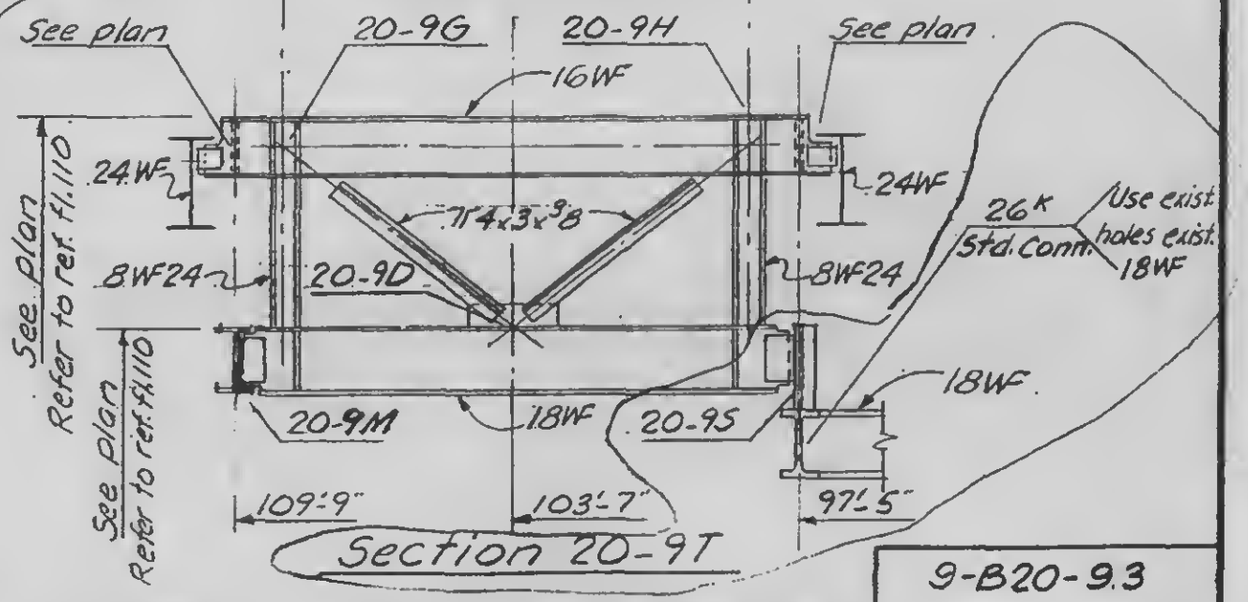

Section 20-9T

9-B20-9.3