SKILLING, HELLE, CHRISTIANSEN, ROBERTSON — Structural & Civil Engineers

PROJECT: THE WORLD TRADE CENTER | TITLE: FL 107 - PH CONNECTION DETAILS - PH ROOF | DATE: 4-1-70

REVISIONS

8/20/70

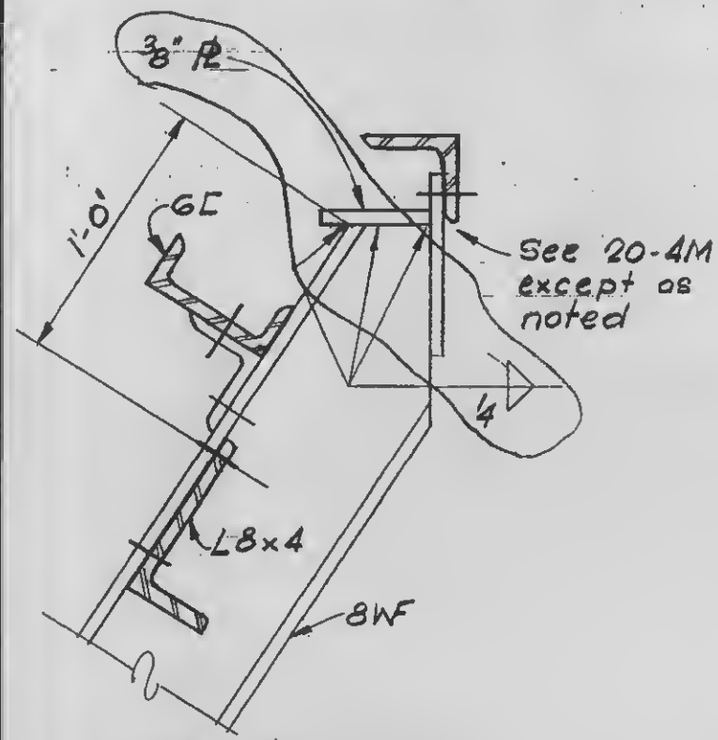

Section b-b

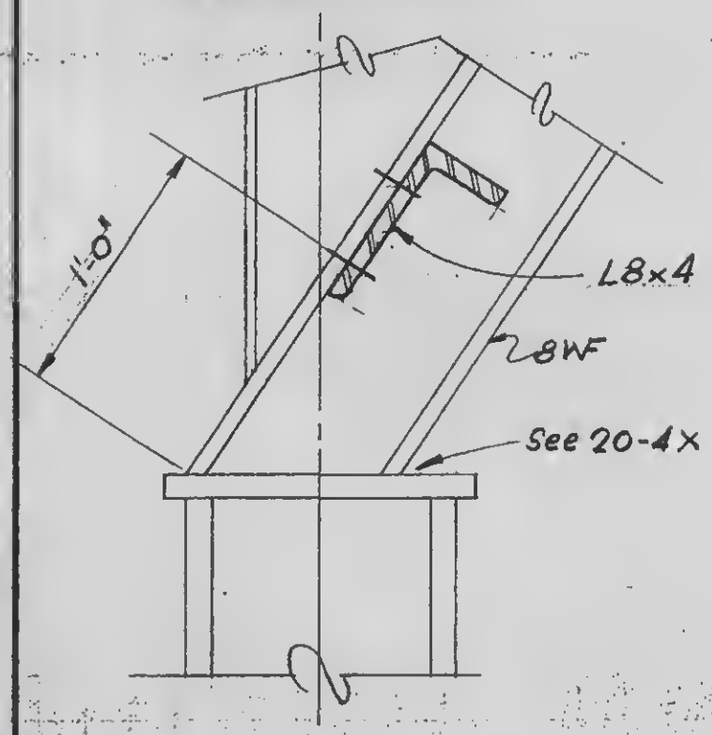

Section c-c

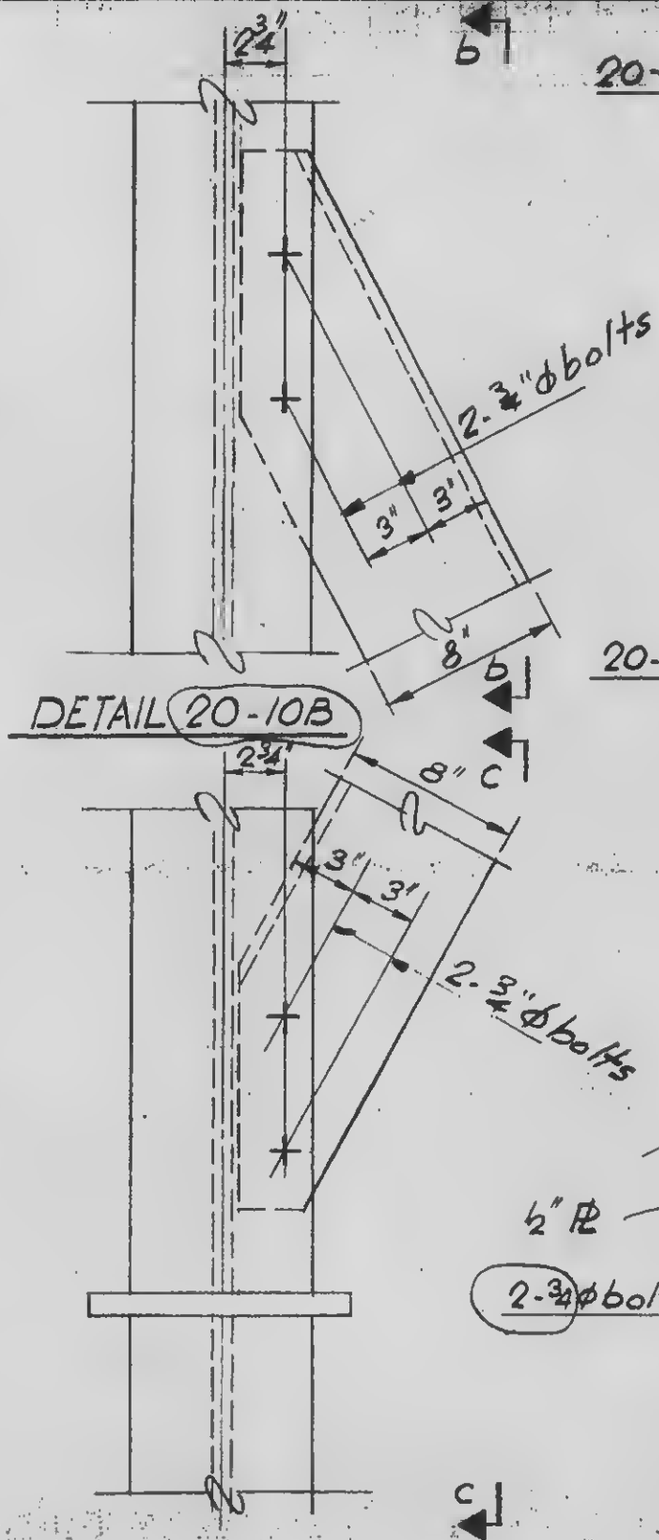

DETAIL 20-10C

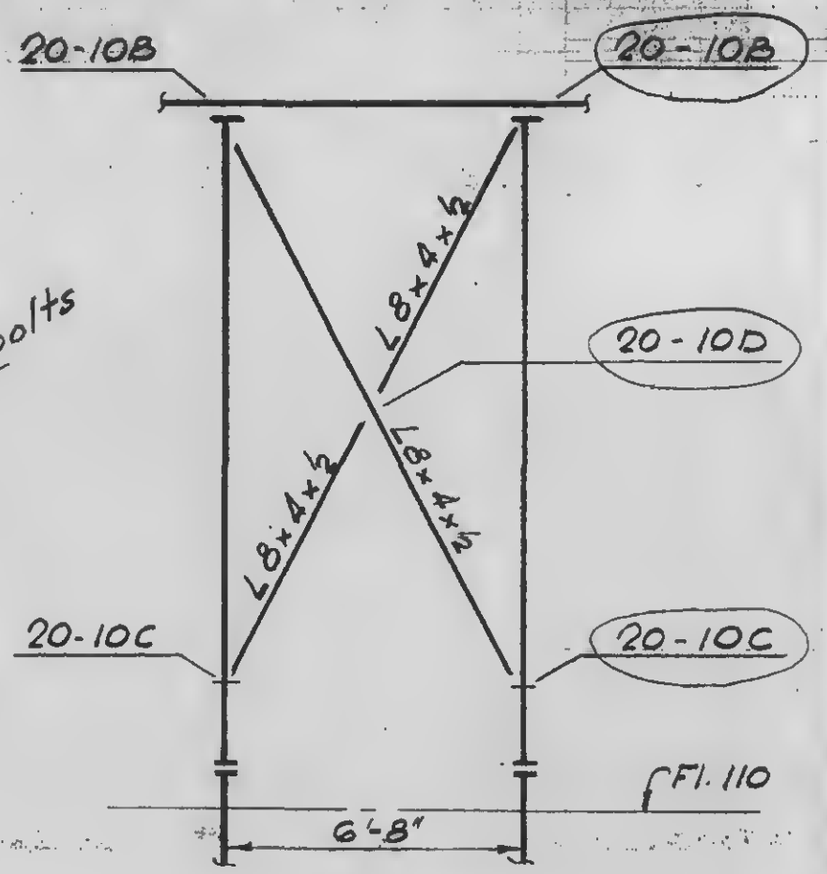

DETAIL 20-10A

See SA 1201 SB for location

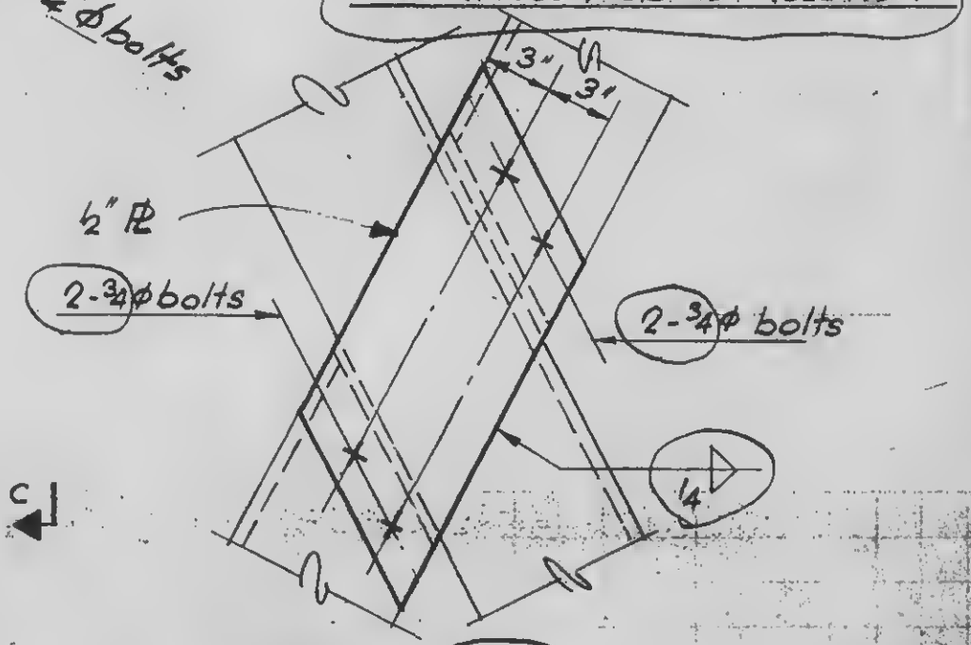

DETAIL 20-10D

LICENSED PROFESSIONAL ENGINEER — LESLIE E. ROBERTSON — No. 34360 — UNIVERSITY OF THE STATE OF NEW YORK

DESIGNED

DRAWN: T. Terrelonge

REVIEWED

9-AB 20-10