SKILLING, HELLE, CHRISTIANSEN, ROBERTSON — Structural & Civil Engineers

PROJECT THE WORLD TRADE CENTER | TITLE FL. 107-PH CONNECTION DETAILS - POSTS & MISC. | DATE 4-1-70

REVISIONS

5/27/70

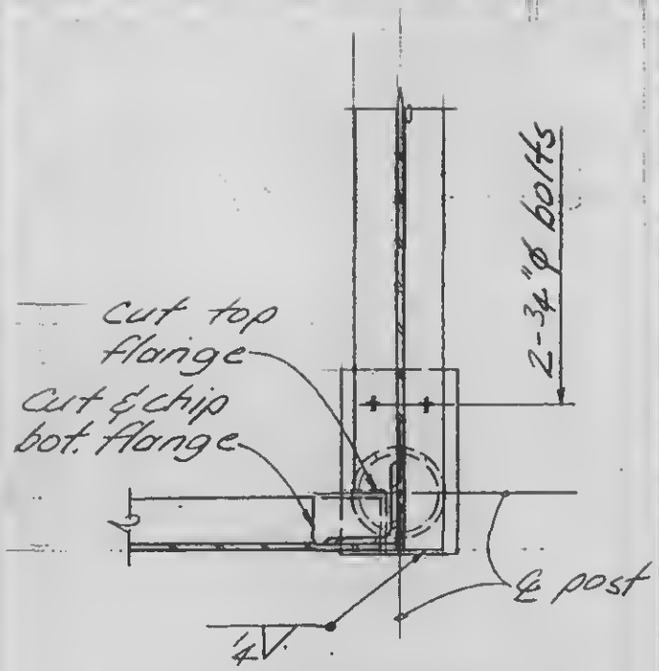

Section a-a

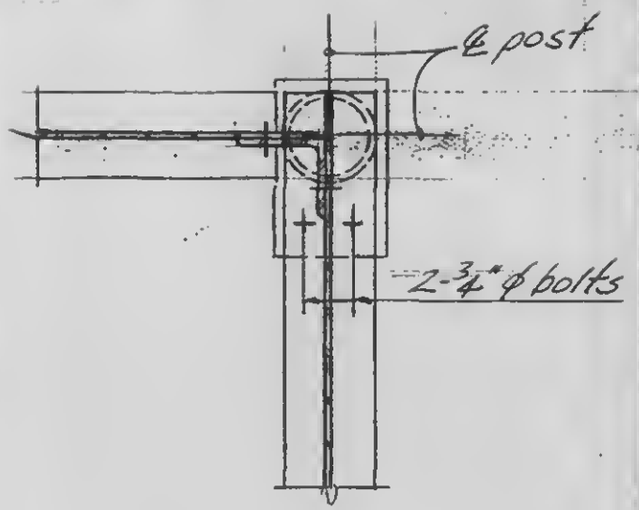

Section b-b

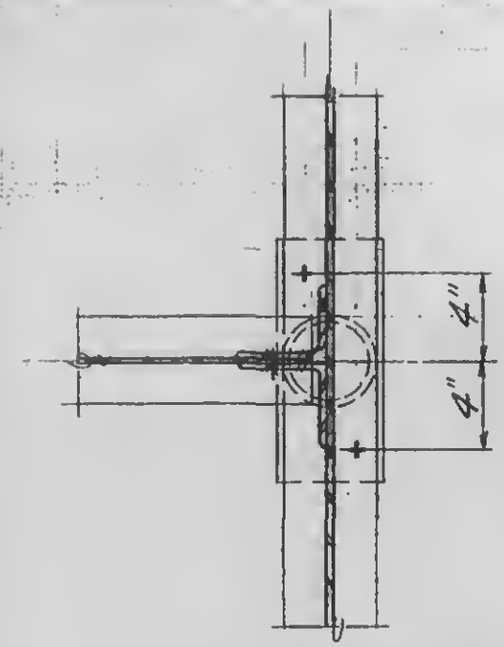

Section c-c

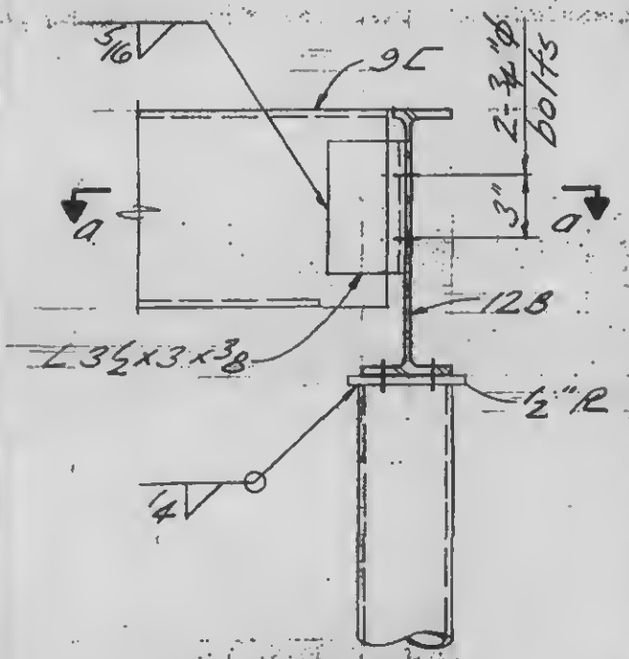

Elevation

Detail 21-2A

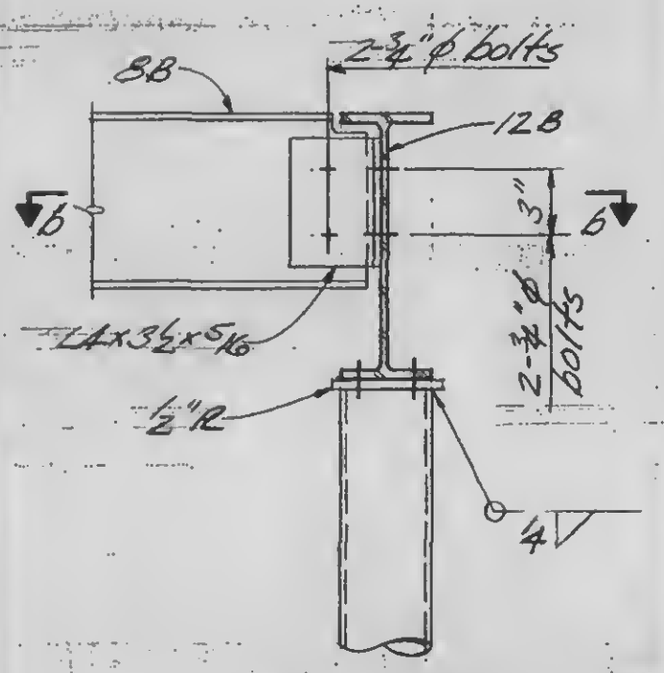

Elevation

Detail 21-2B

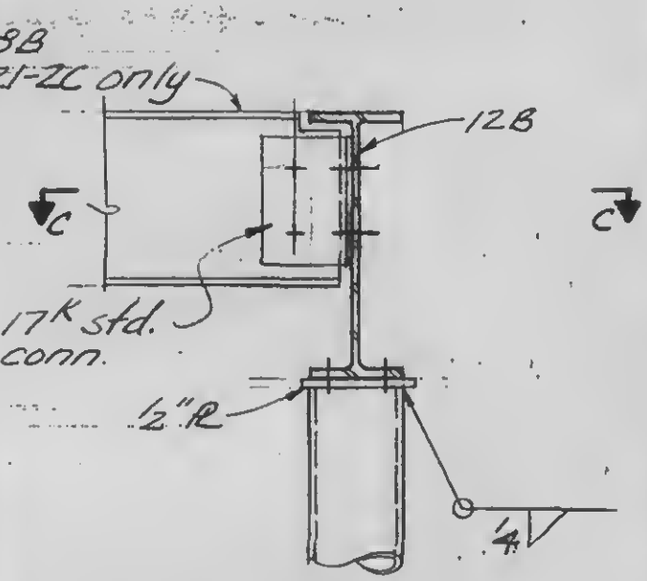

Elevation

Detail 21-2C as noted

Detail 21-2D

LICENSED PROFESSIONAL ENGINEER
LESLIE E. ROBERTSON
No. 34360
UNIVERSITY OF THE STATE OF NEW YORK

DESIGNED

DRAWN J. Adams

REVIEWED W. Brewer

9-A821-2.1