SKILLING, HELLE, CHRISTIANSEN, ROBERTSON — Structural & Civil Engineers

PROJECT THE WORLD TRADE CENTER | TITLE EL.107-PH, CONNECTION DETAILS - POSTS & MISC | DATE 6-15-70

REVISIONS

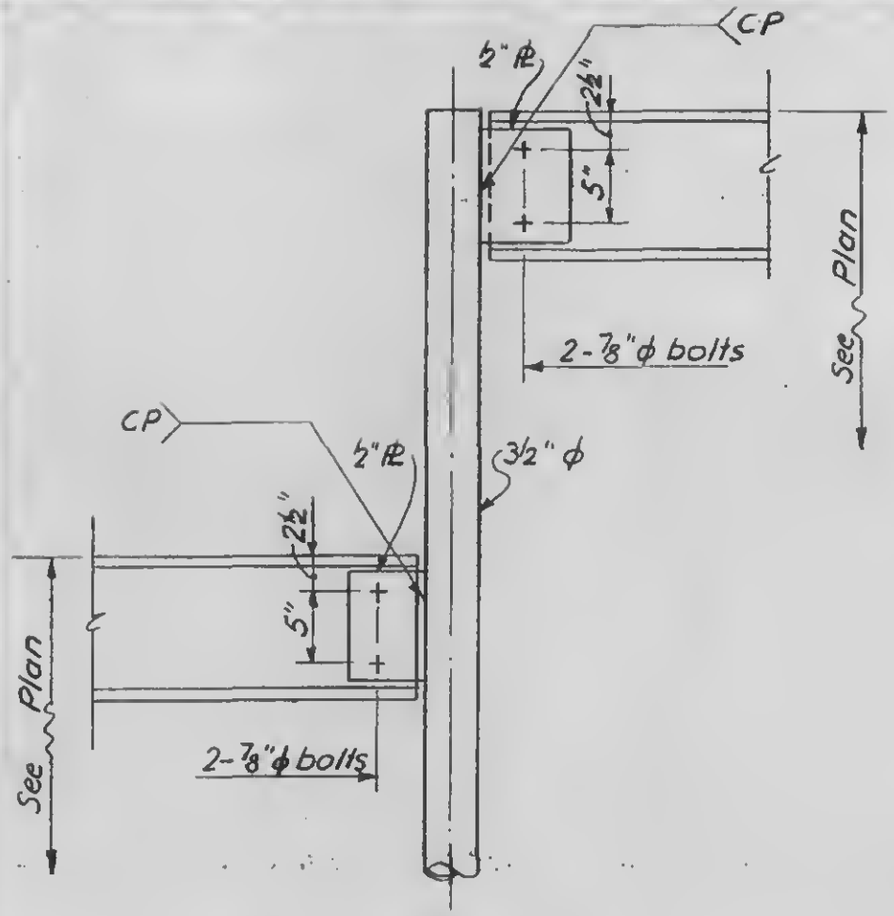


Detail 21-4B

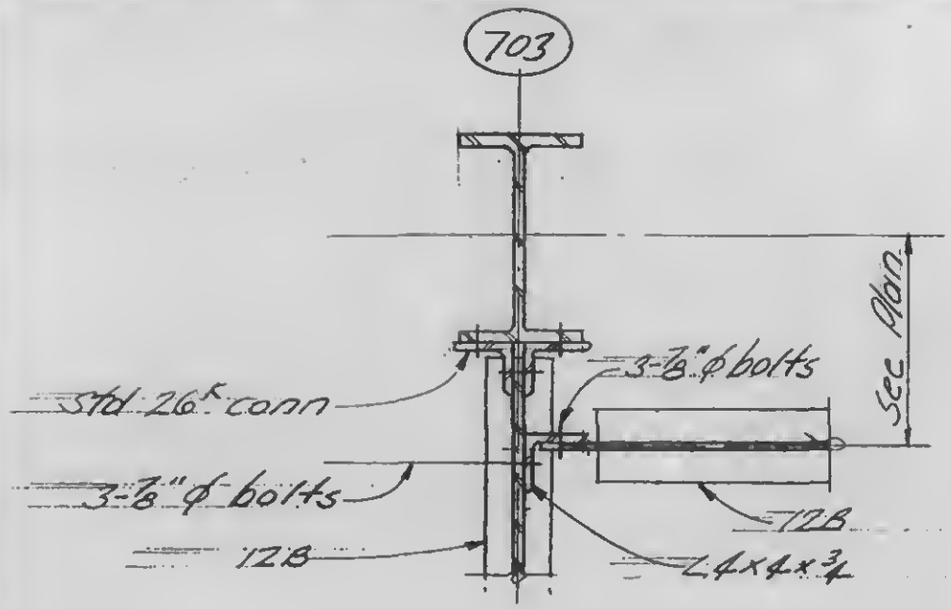


Detail 21-4C

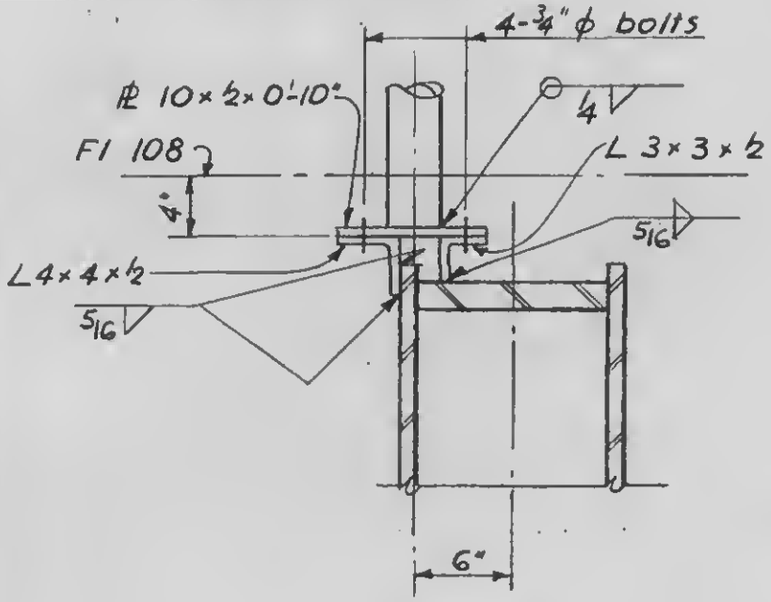


Detail 21-4A

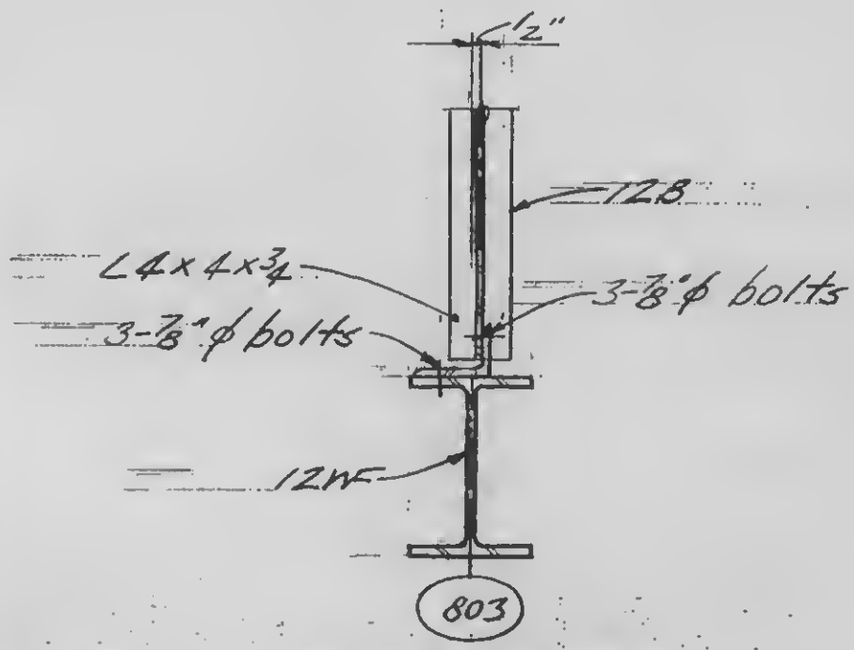


Detail 21-4D

LICENSED PROFESSIONAL ENGINEER LESLIE E. ROBERTSON NO. 34360 UNIVERSITY OF THE STATE OF NEW YORK

DESIGNED

DRAWN F. Smith

REVIEWED

9-AB 21-4