SKILLING, HELLE, CHRISTIANSEN, ROBERTSON — Structural & Civil Engineers

PROJECT: THE WORLD TRADE CENTER | TITLE: FL.107 - PH. CONNECTION DETAILS - FL.109 | DATE: 4-1-70

REVISIONS

6-15-70

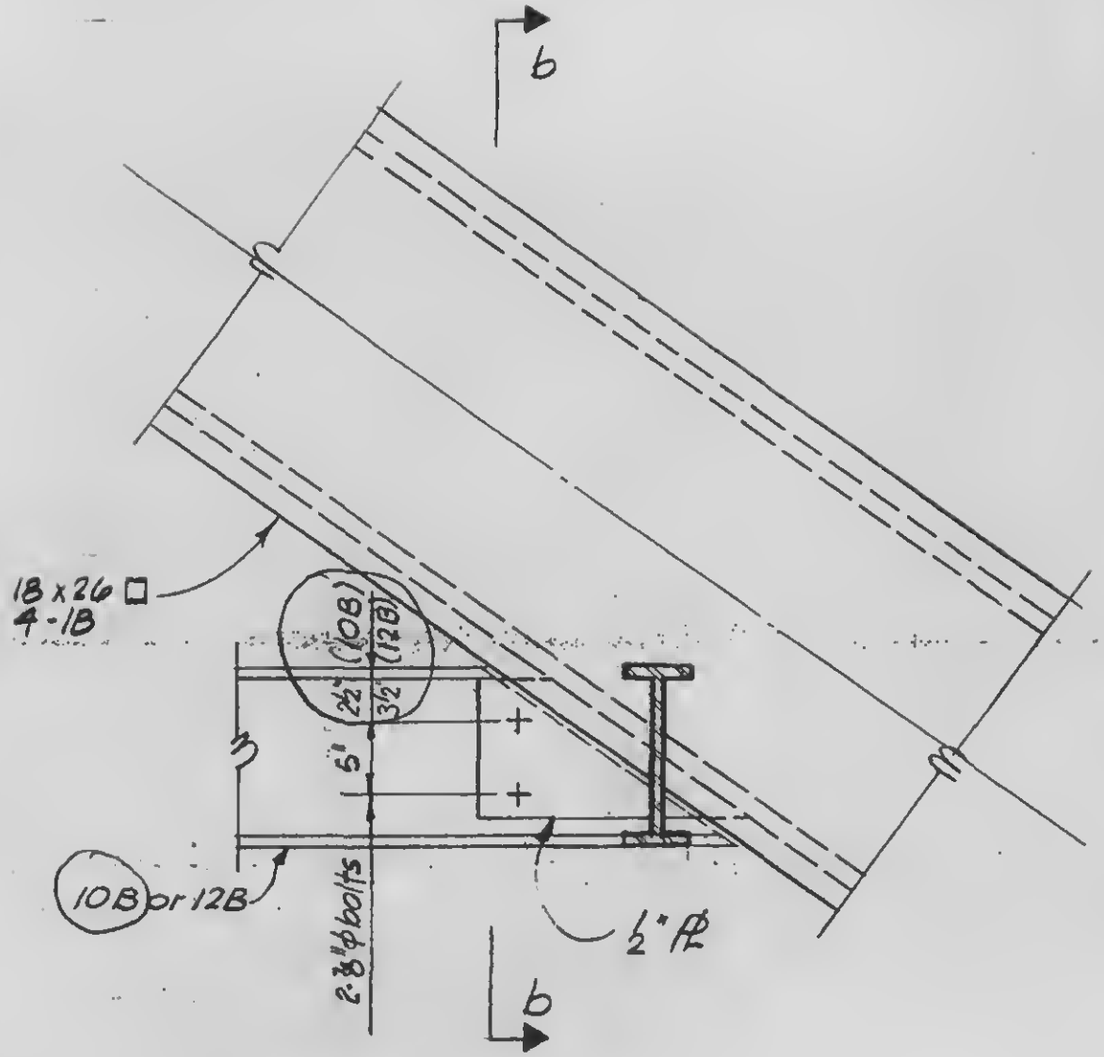

Section a-a

Detail 22-3A

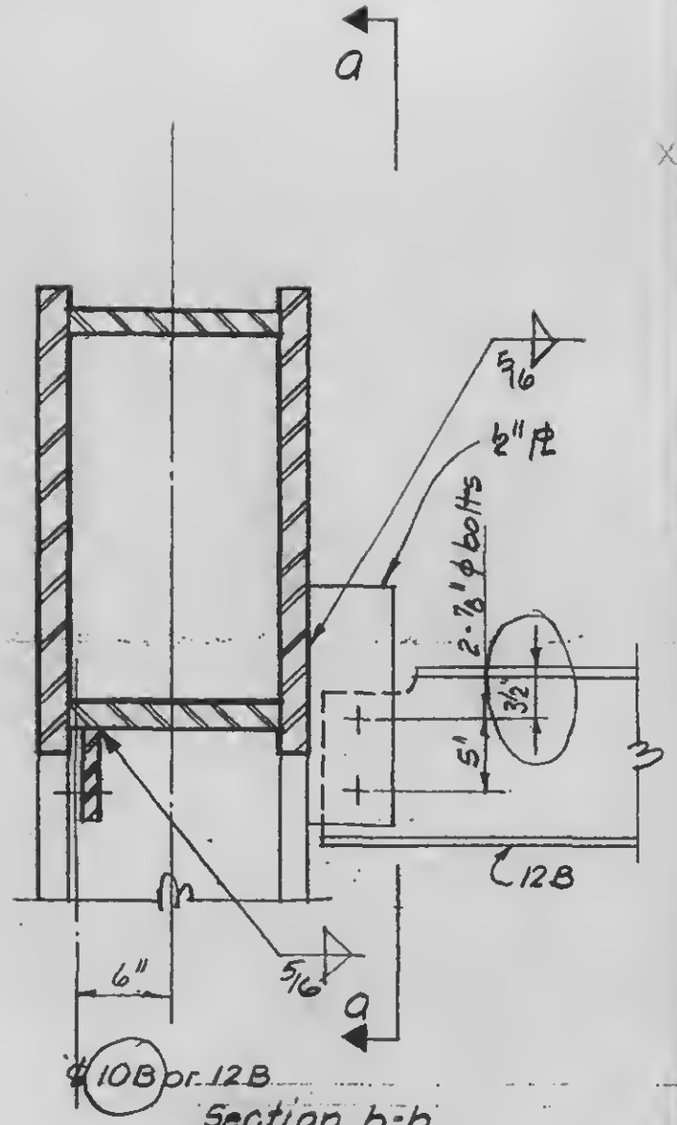

Section b-b

Detail 22-3B

LICENSED PROFESSIONAL ENGINEER
LESLIE E. ROBERTSON
No. 34360
UNIVERSITY OF THE STATE OF NEW YORK

DESIGNED

DRAWN P.M.Ozeki

REVIEWED

9-AB22-3