SKILLING, HELLE, CHRISTIANSEN, ROBERTSON — Structural & Civil Engineers

PROJECT: THE WORLD TRADE CENTER | TITLE: FLOOR TRUSS CONNECTION DETAILS - PH ROOF | DATE: 12-21-70

REVISIONS

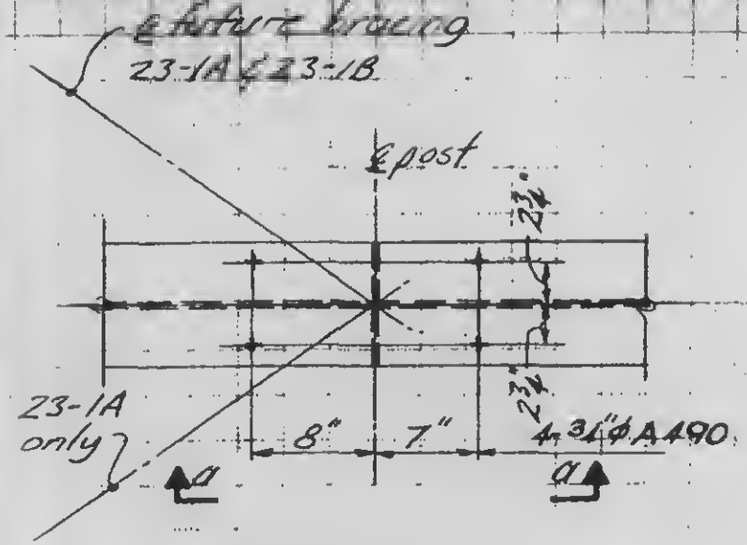

23-1A
23-1B

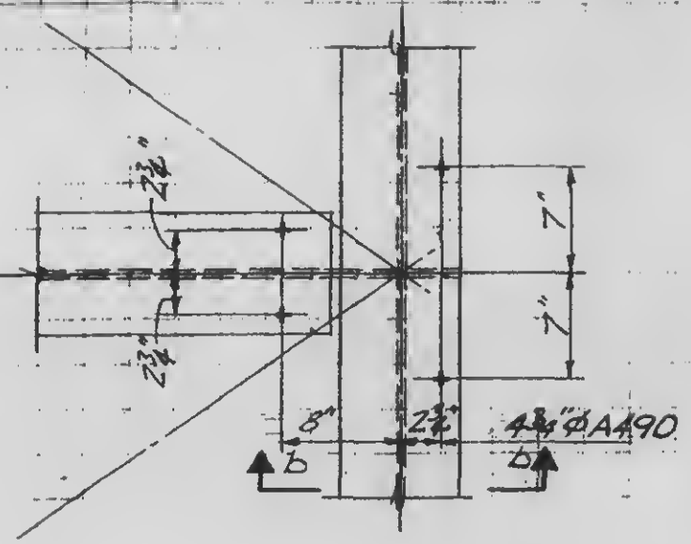

23-1C

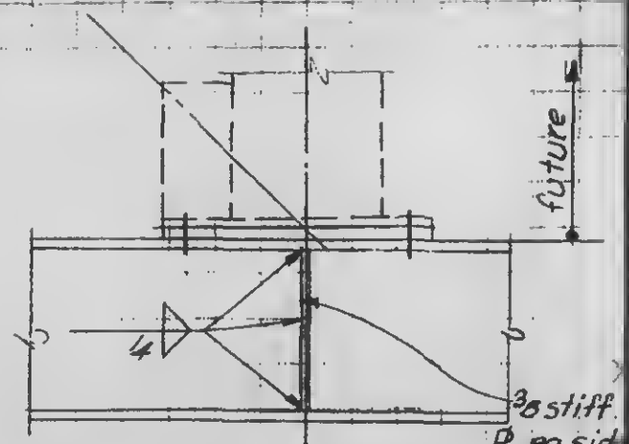

Section a-a

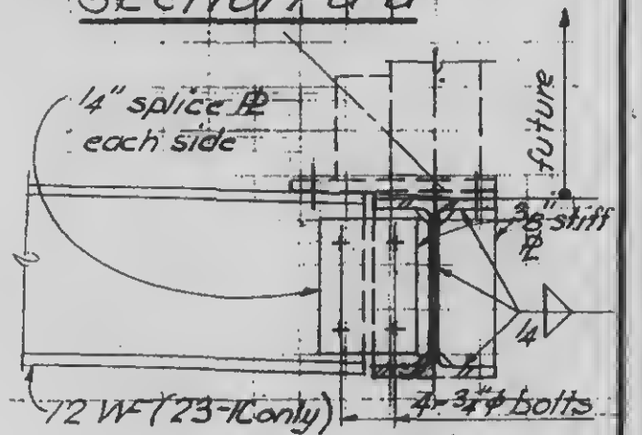

Section b-b

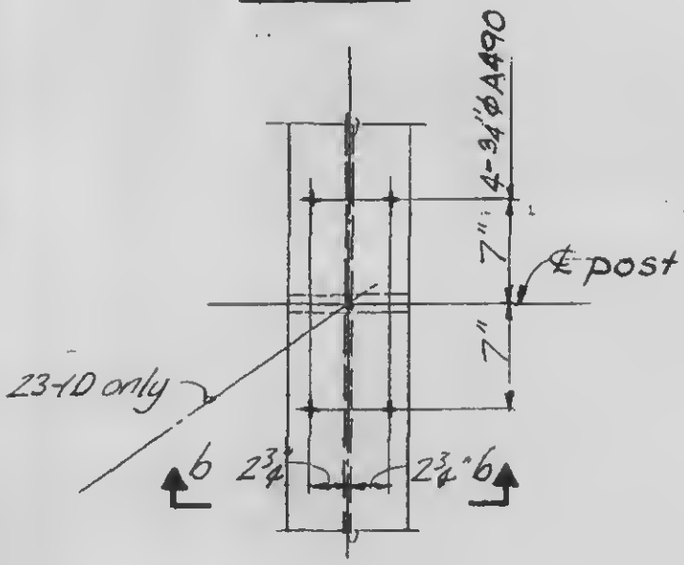

23-1D
23-1F

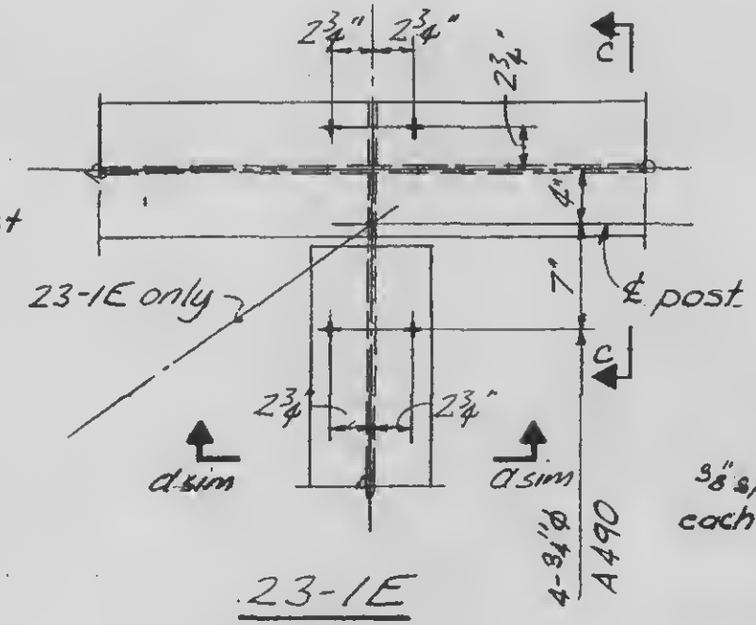

23-1E
23-1G

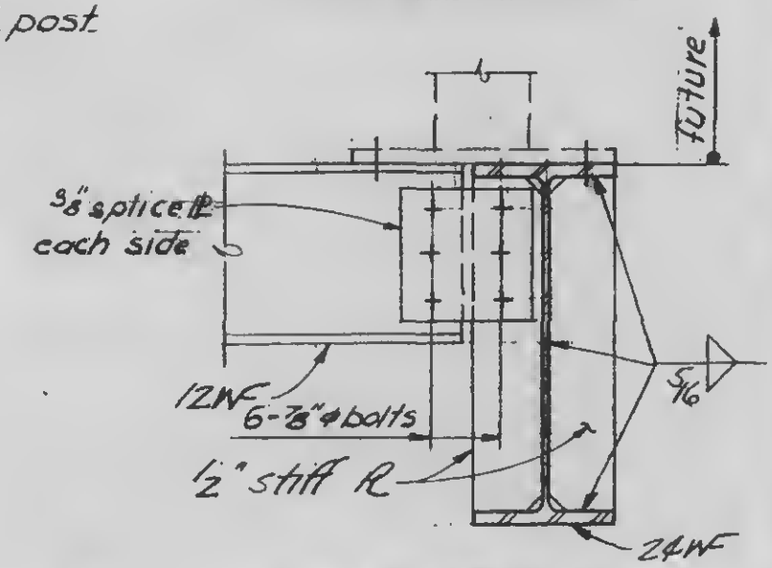

Section c-c

LICENSED PROFESSIONAL ENGINEER — LESLIE E. ROBERTSON — No 34360 — UNIVERSITY OF THE STATE OF NEW YORK

SIGNED

DRAWN J. Adams

REVIEWED

9-B23-1