SKILLING, HELLE, CHRISTIANSEN, ROBERTSON — Structural & Civil Engineers

PROJECT: THE WORLD TRADE CENTER | TITLE: FLOOR 107-PH CONNECTION DETAILS-POSTS & MISC | DATE: 4-1-70

REVISIONS

5/27/70

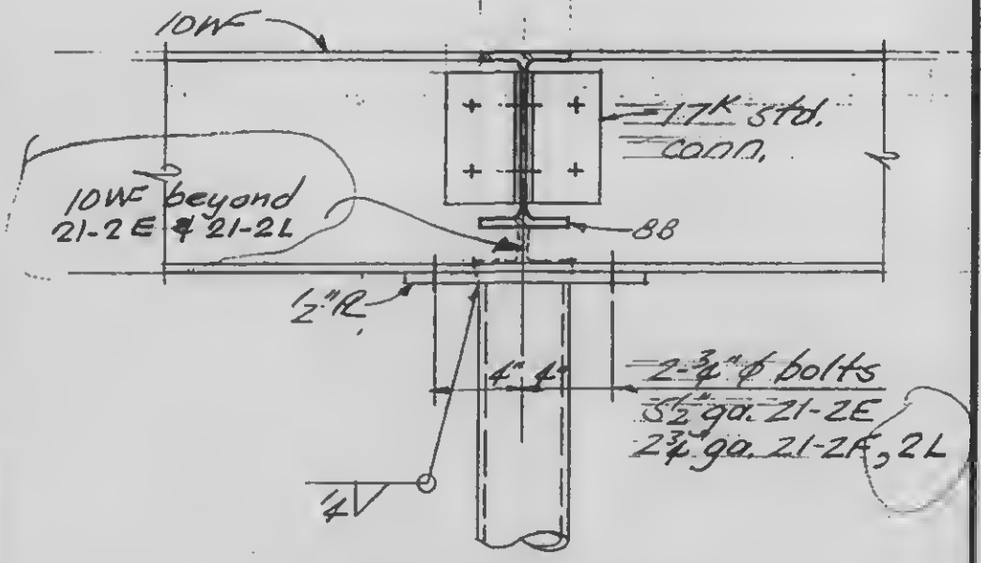

Detail 21-2E
Detail 21-2F & 2L

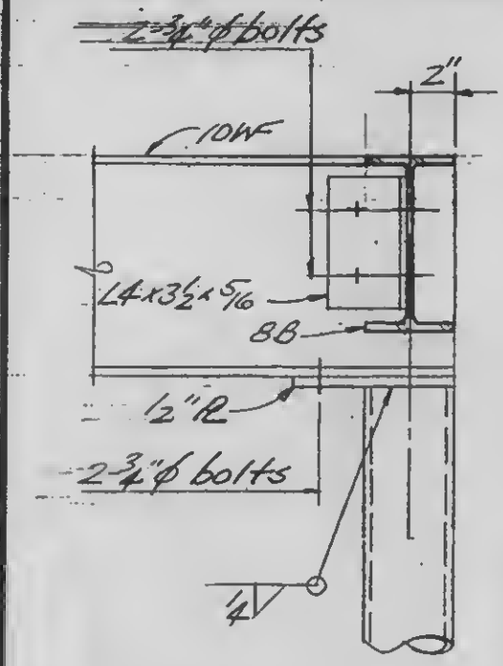

Detail 21-2G

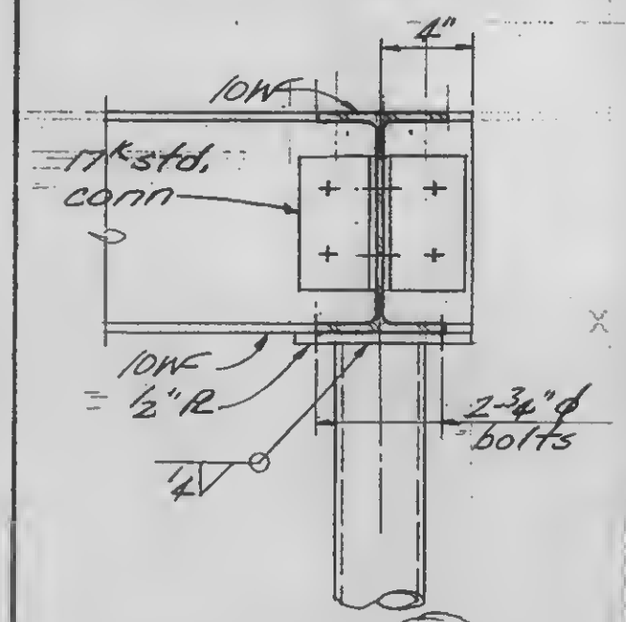

Detail 21-2H

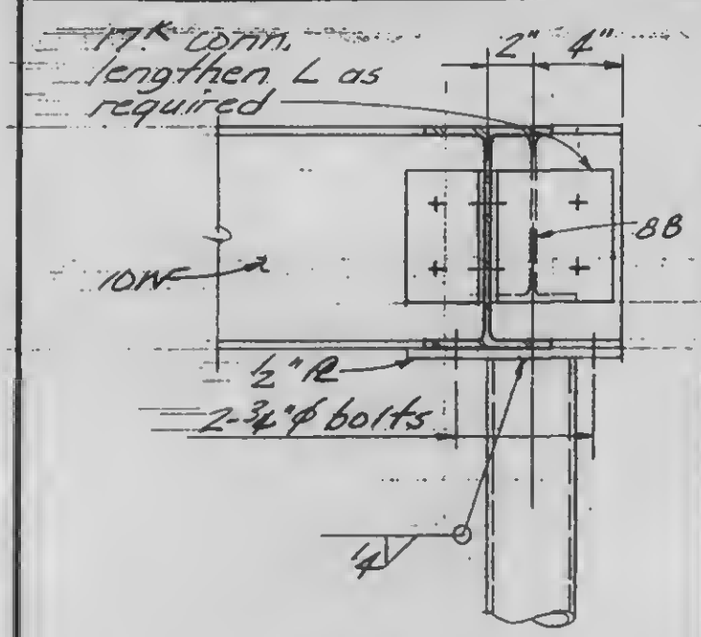

Detail 21-2J

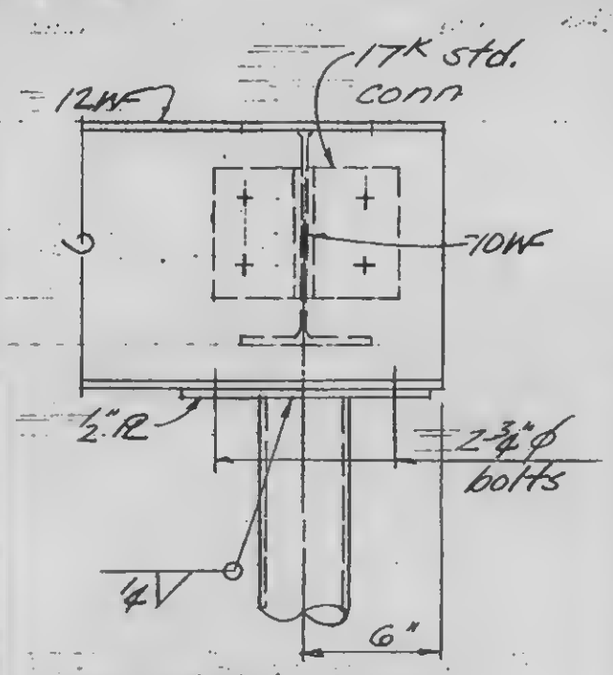

Detail 21-2K

LICENSED PROFESSIONAL ENGINEER
LESLIE E. ROBERTSON
No. 34360
UNIVERSITY OF THE STATE OF NEW YORK

DESIGNED

DRAWN J. Adams

REVIEWED W. Brewer

9-AB21-9