SKILLING, HELLE, CHRISTIANSEN, ROBERTSON — Structural & Civil Engineers

PROJECT THE WORLD TRADE CENTER | TITLE FL. 107-PH CONNECTION DETAILS-POSTS & MISC | DATE 4-1-70

REVISIONS

5/27/70

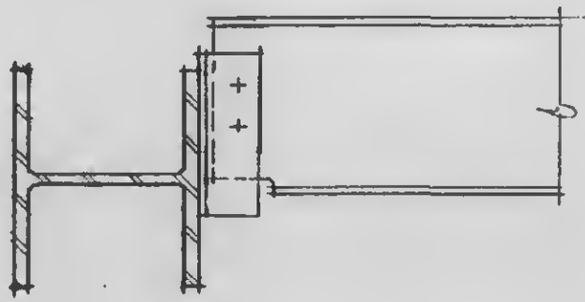

Section a-a

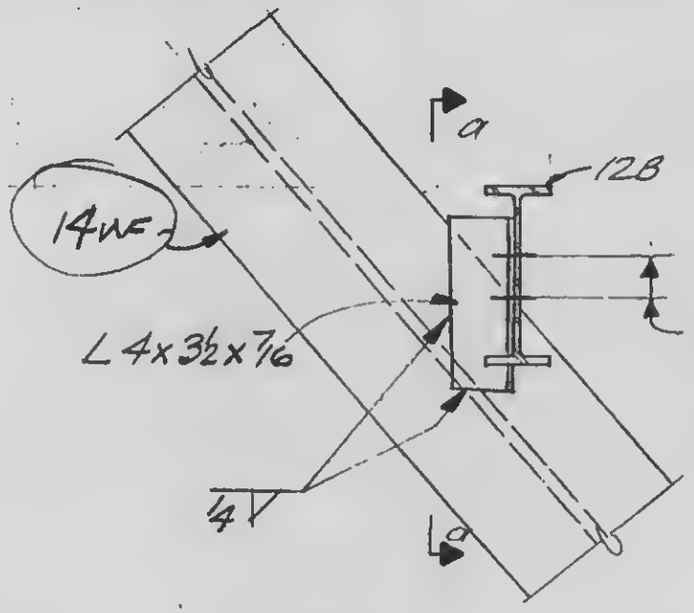

Detail 21-3C

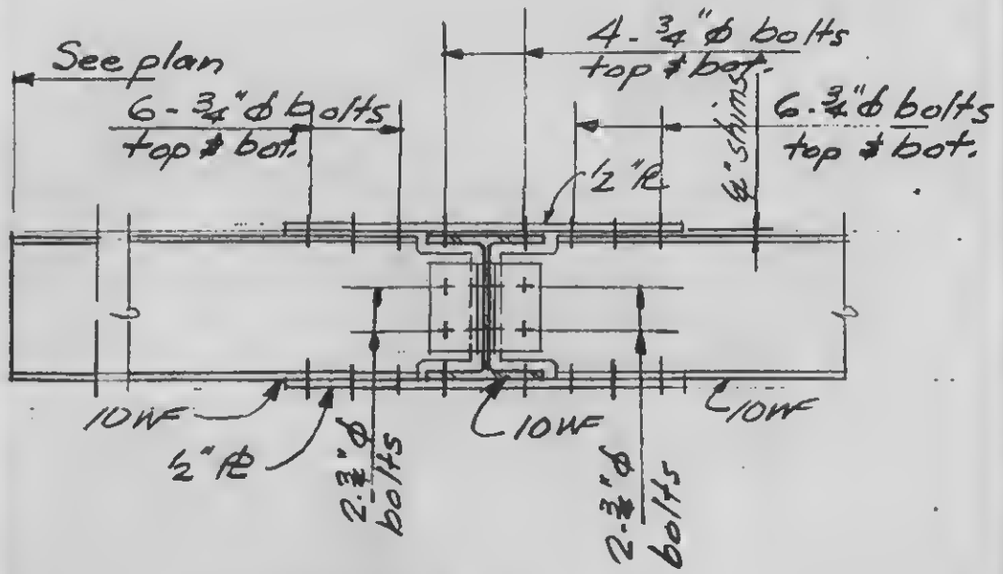

Detail 21-3E

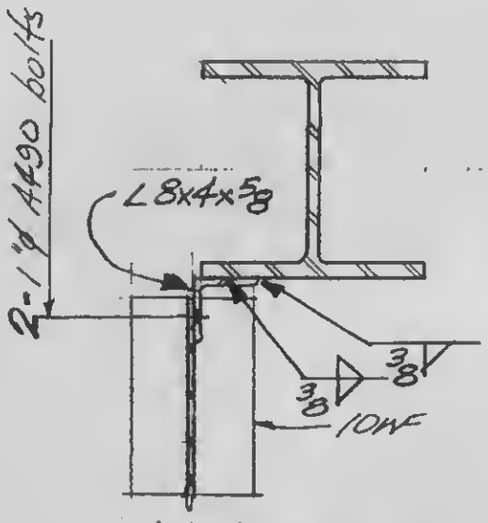

Detail 21-3F

LICENSED PROFESSIONAL ENGINEER — LESLIE E. ROBERTSON — No. 34360 — UNIVERSITY OF THE STATE OF NEW YORK

DESIGNED

DRAWN J. Adams

REVIEWED W. Brewer

9-ABZ1-3.2