SKILLING, HELLE, CHRISTIANSEN, ROBERTSON — Structural & Civil Engineers

PROJECT THE WORLD TRADE CENTER | TITLE EL 107-PH, CONNECTION DETAILS - POSTS & MISC | DATE 6-15-70

REVISIONS

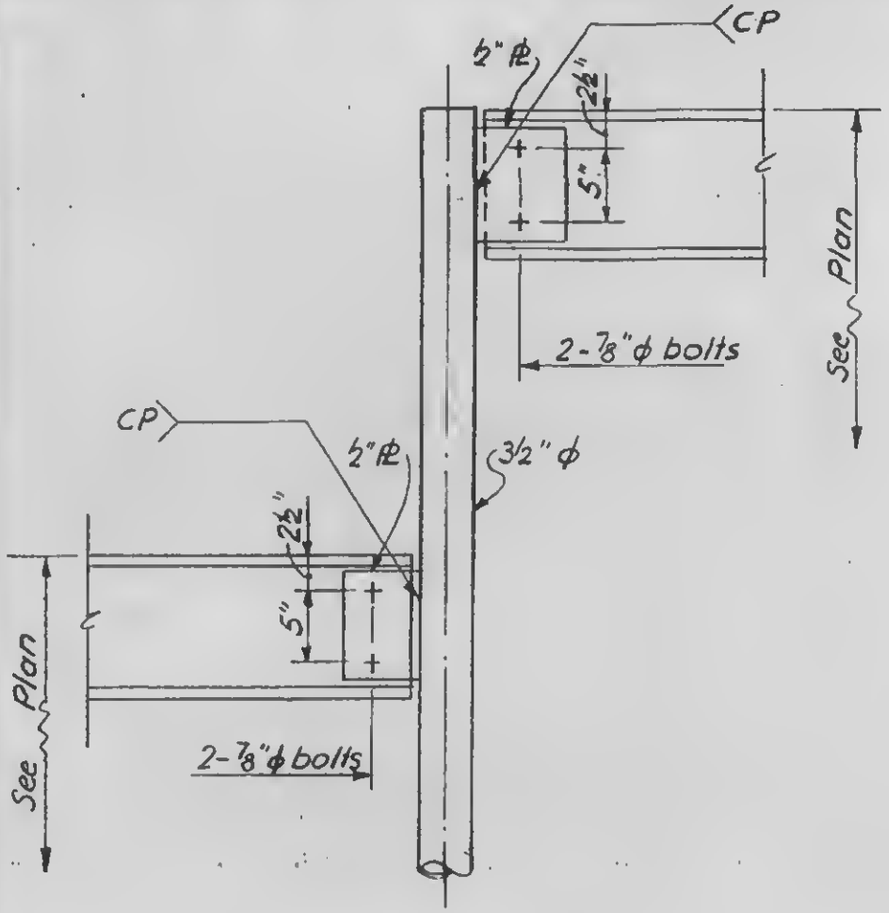


Detail 21 - 4B

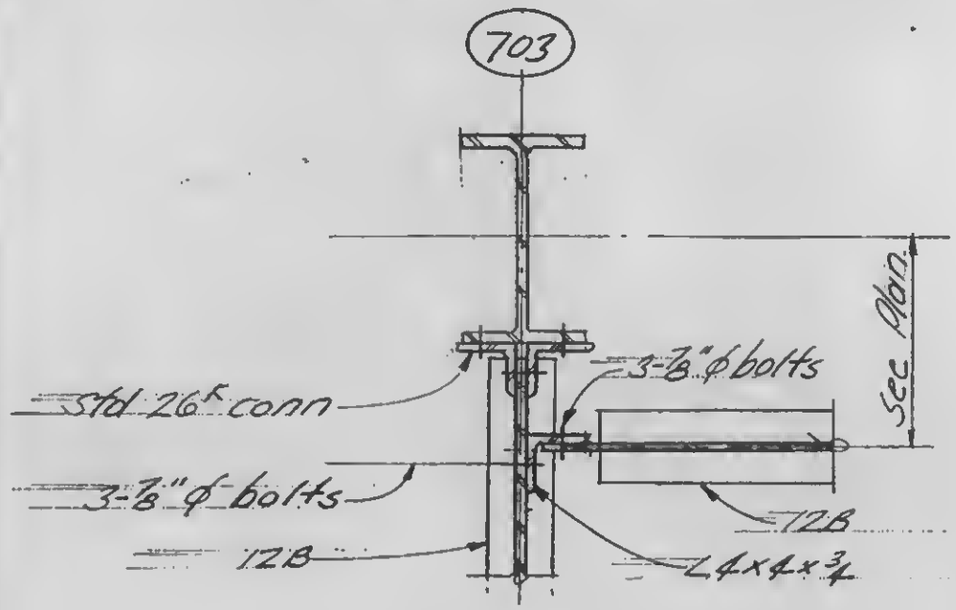


Detail 21-4C

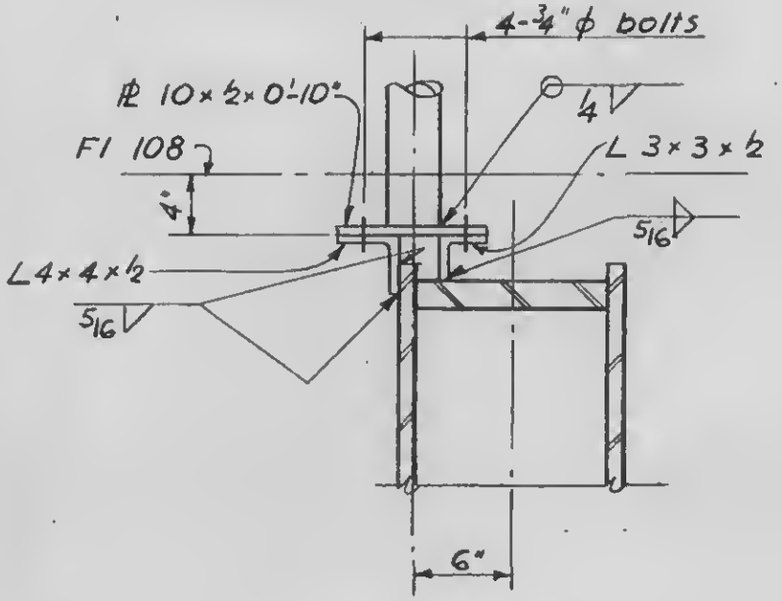


Detail 21-4A

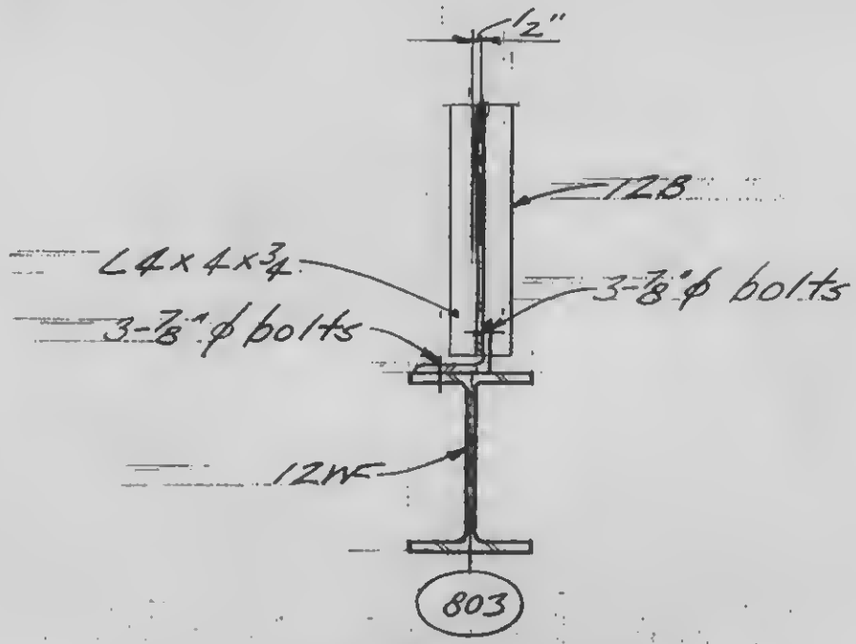


Detail 21-4D

LICENSED PROFESSIONAL ENGINEER
LESLIE E. ROBERTSON
No. 34360
UNIVERSITY OF THE STATE OF NEW YORK

DESIGNED

DRAWN F. Smith

REVIEWED

9-AB 21-4