SKILLING, HELLE, CHRISTIANSEN, ROBERTSON — Structural & Civil Engineers

PROJECT: THE WORLD TRADE CENTER

TITLE: FL.101 - PH CONNECTION DETAIL - FL.109

DATE: 4-1-70

REVISIONS

6-15-70

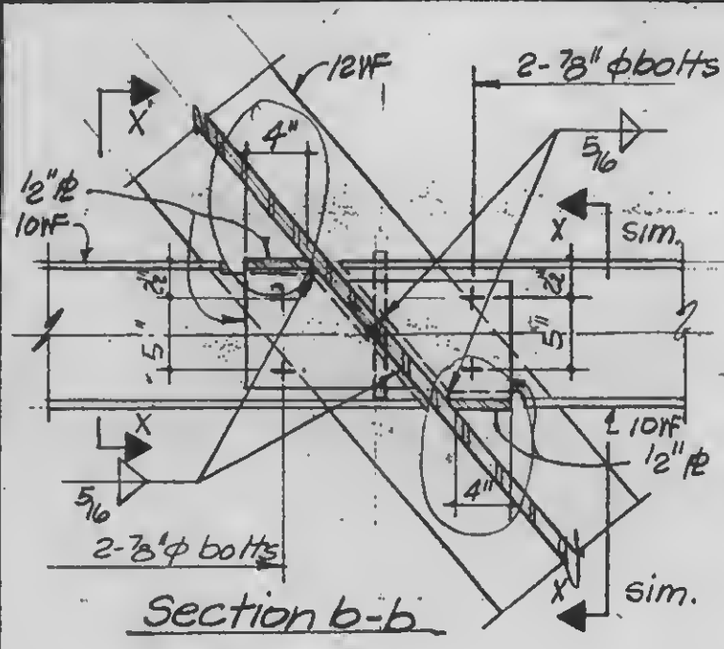

Section b-b

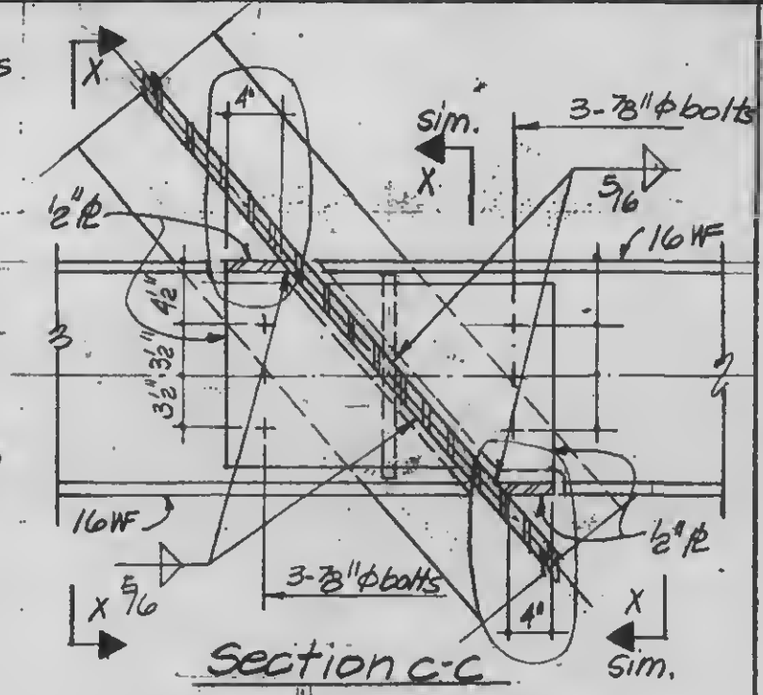

Section c-c

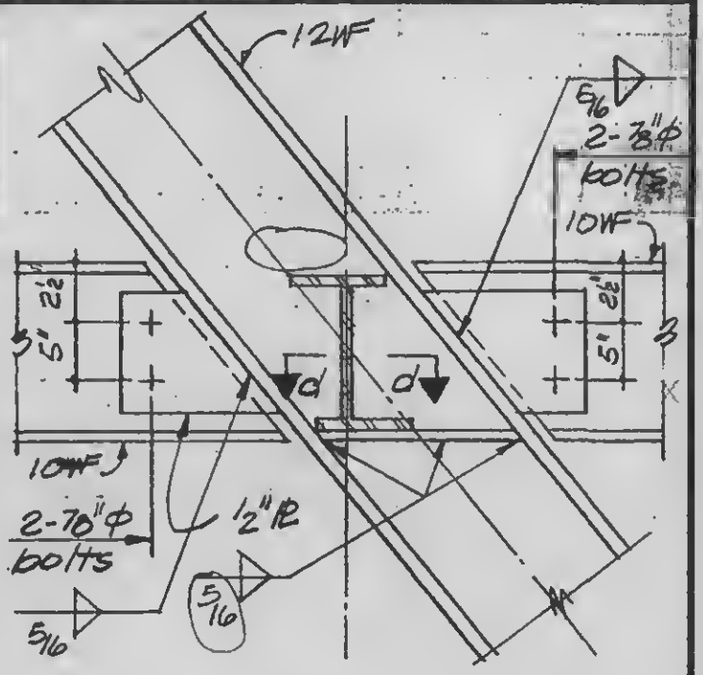

Detail 22-1N

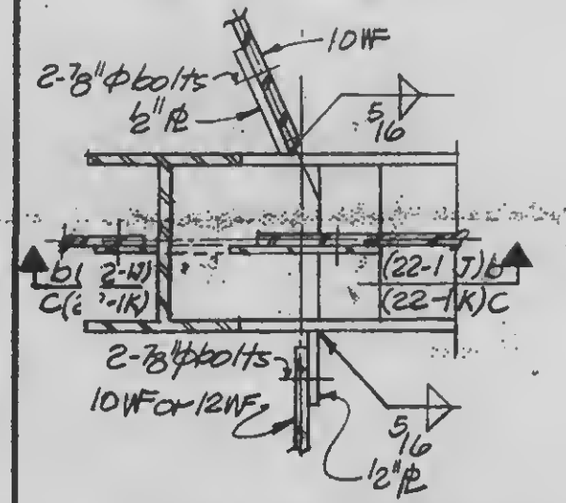

Plan 22-1J & 22-1K

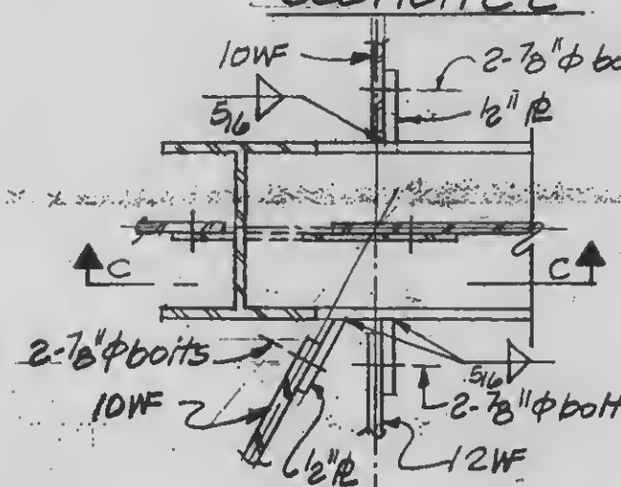

Plan 22-1L

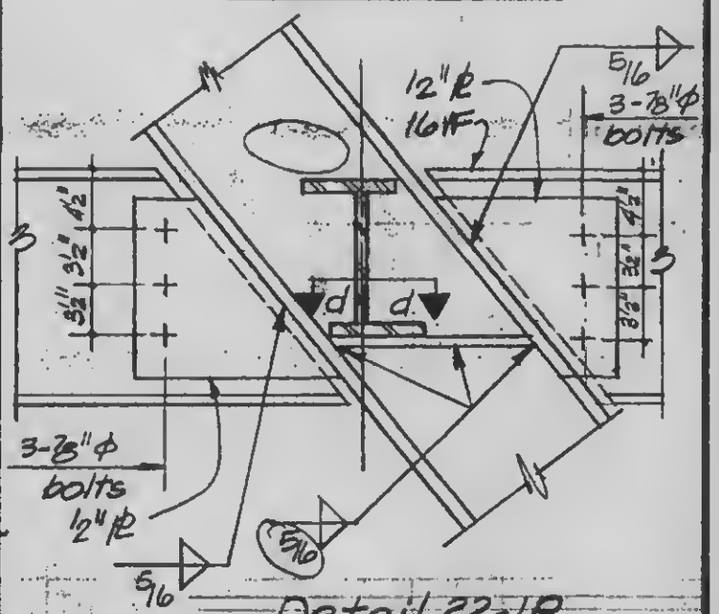

Detail 22-1P

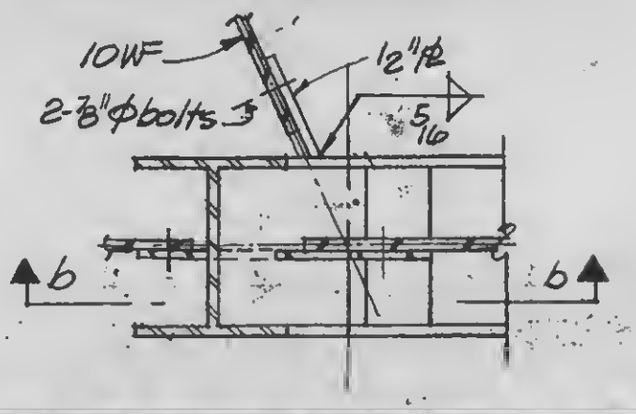

Plan 22-1M

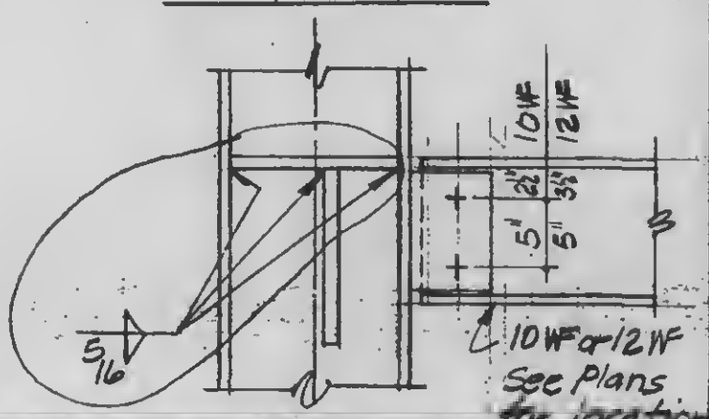

Section x-x

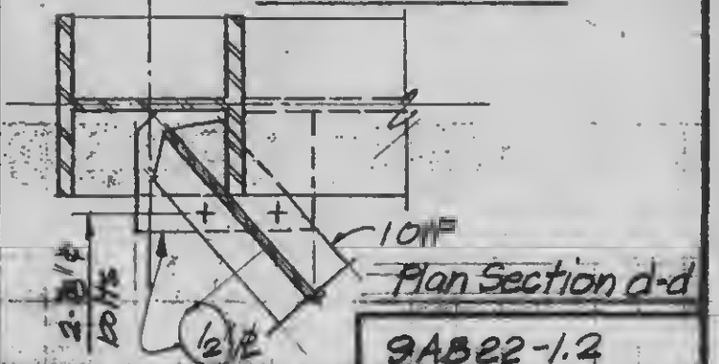

Plan Section d-d

LICENSED PROFESSIONAL ENGINEER
LESLIE E. ROBERTSON
No. 34360
UNIVERSITY OF THE STATE OF NEW YORK

DESIGNED

DRAWN: F. Ozeki

REVIEWED

9AB22-1.2