REVISIONS

1-5-68

TYPICAL BEAM TO GIRDER CONNECTION

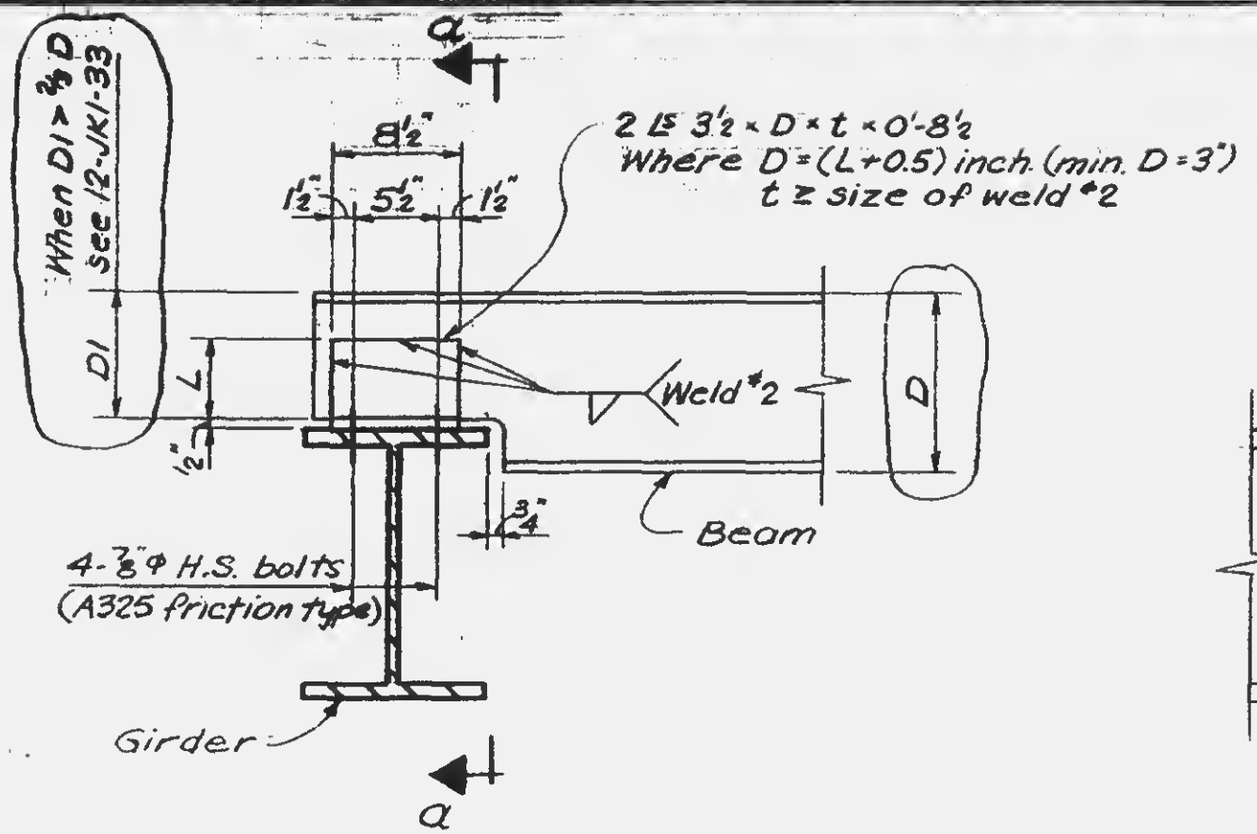

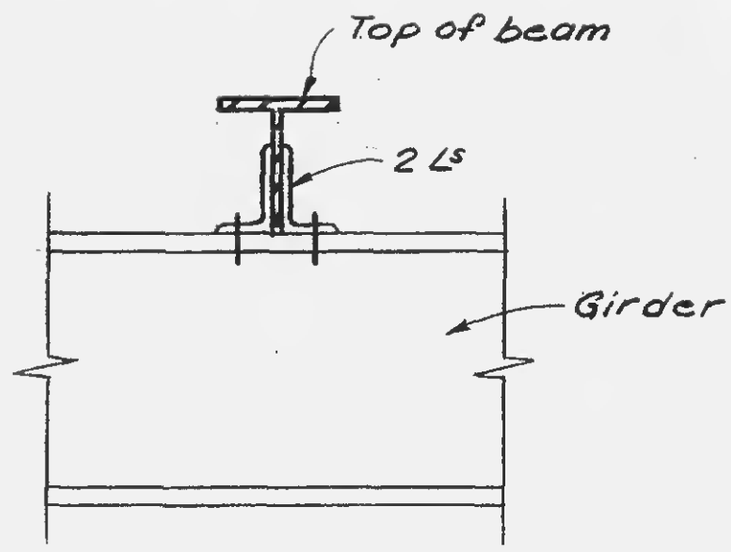

SECTION a-a

$$L\ (\text{inch.}) = \tfrac{1}{2}\left(\frac{\text{Reaction}}{1.4B} - 8.5\right)$$

Min. L = 2½"

Where B = is the number of sixteenths in the weld size

WHERE TOP OF BEAM IS MUCH HIGHER THAN TOP OF GIRDER

LESLIE E. ROBERTSON
No. 34960