SKILLING - HELLE - CHRISTIANSEN - ROBERTSON — Structural & Civil Engineers

PROJECT THE WORLD TRADE CENTER | TITLE TYPICAL BEAM TO GIRDER CONNECTION | 14-C-6

REVISIONS

7-19-68

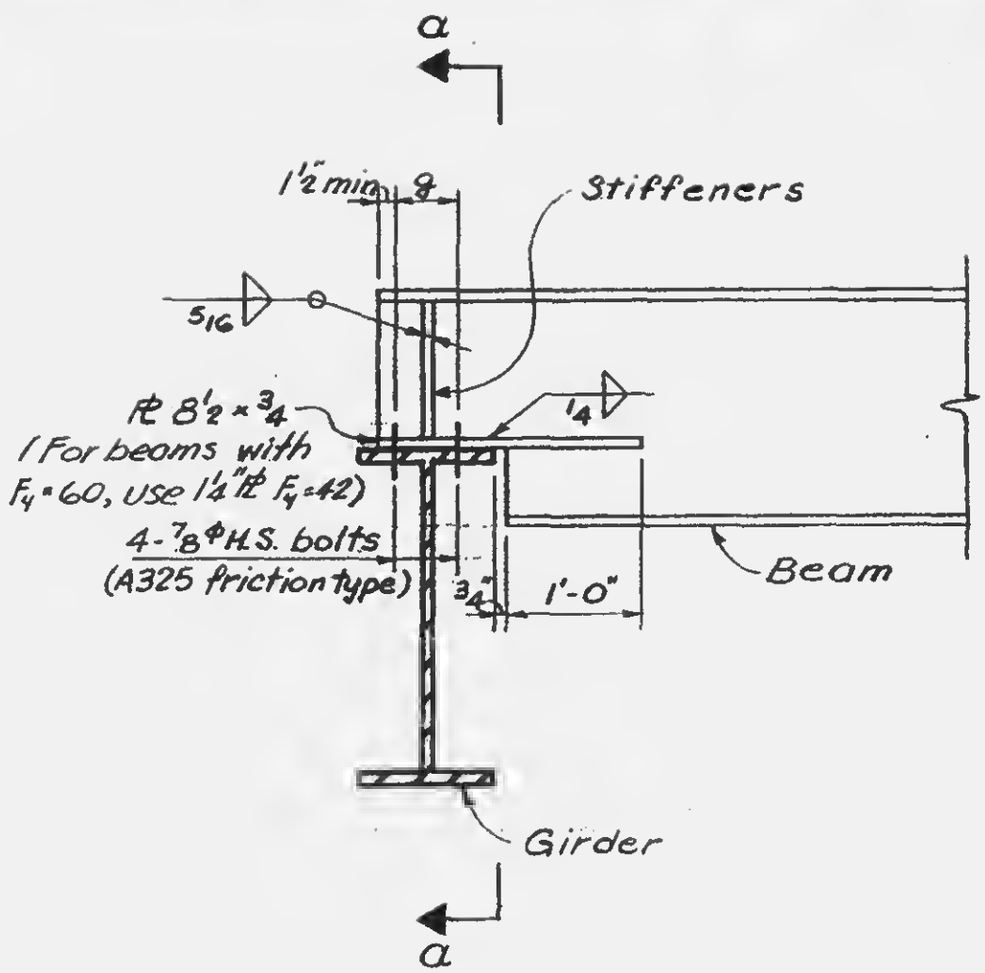

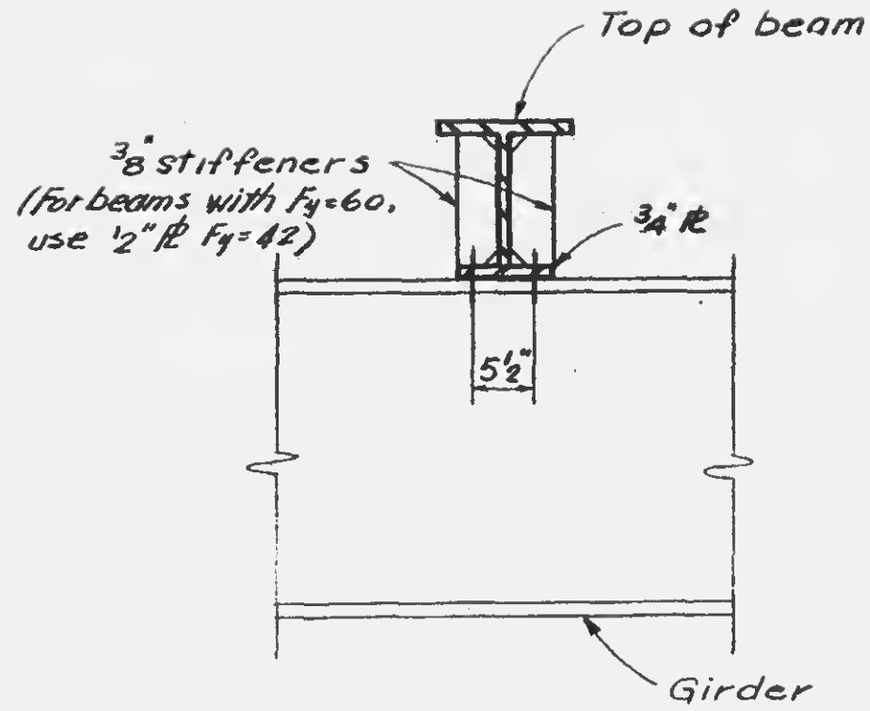

Section a-a

LICENSED PROFESSIONAL ENGINEER
LENIK E. ROBERTSON
No. 34360
REGISTERED TO PRACTICE IN THE STATE OF NEW YORK

12-JK1-33