SKILLING, HELLE, CHRISTIANSEN, ROBERTSON — Structural & Civil Engineers

PROJECT: THE WORLD TRADE CENTER | TITLE: BEAM SUPPORT OVER TOP OF PERIMETER WALL | DATE: 4-18-69

REVISIONS

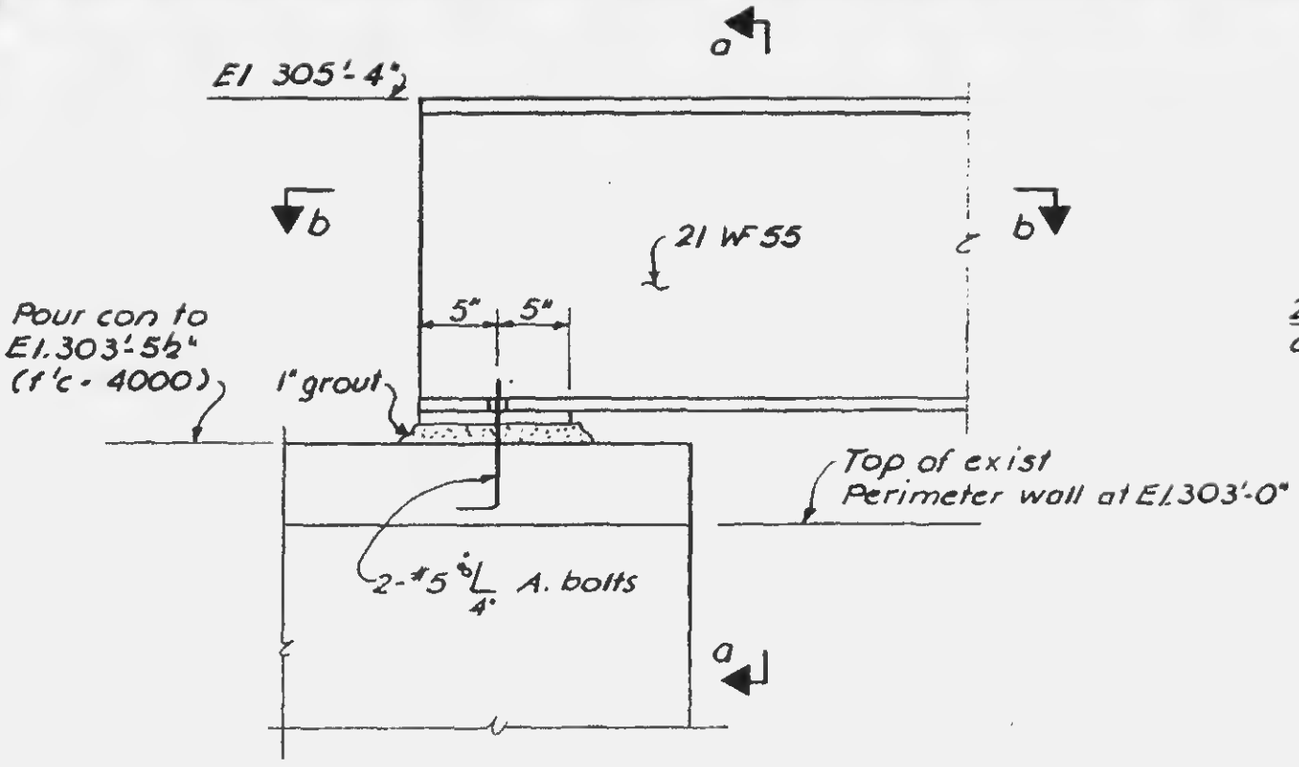

ELEVATION

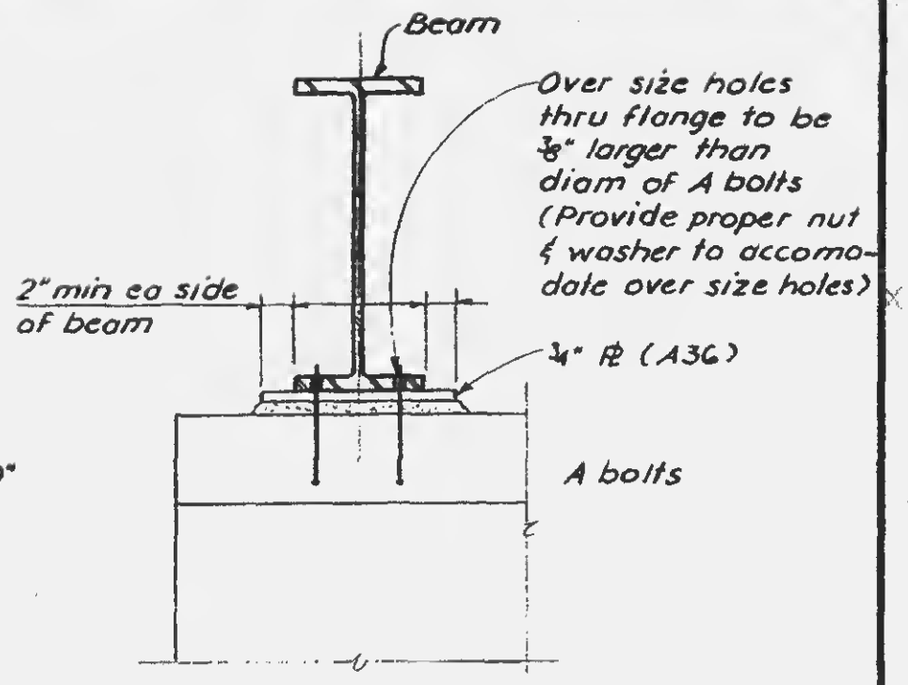

Section a-a

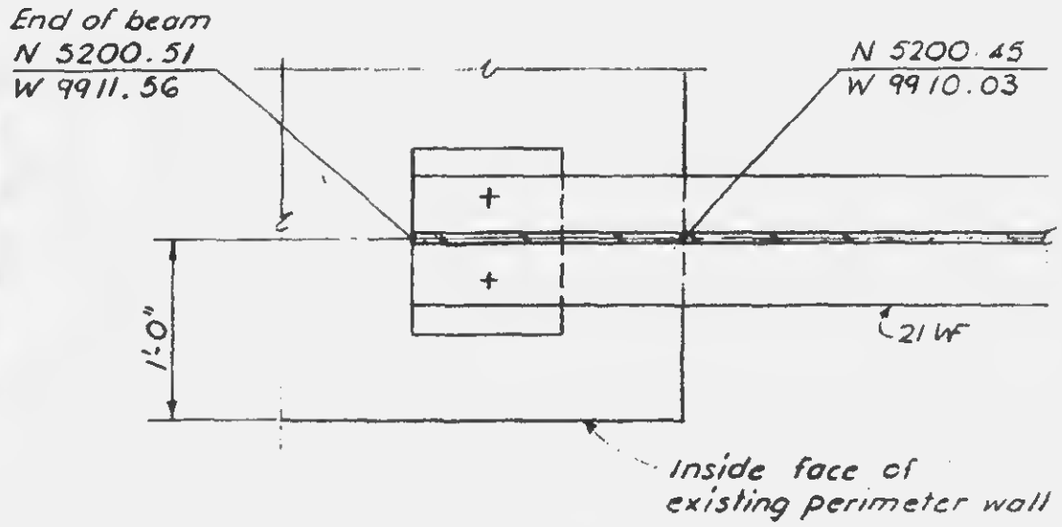

Section b-b

LICENSED PROFESSIONAL ENGINEER
LESLIE E. ROBERTSON
No. 34360
UNIVERSITY OF THE STATE OF NEW YORK

DESIGNED

DRAWN
F. Smith

REVIEWED
E.L.

12-JK1-36