SKILLING, HELLE, CHRISTIANSEN, ROBERTSON — Structural & Civil Engineers

PROJECT: THE WORLD TRADE CENTER | TITLE: CONNECTION DETAILS | DATE: 6-13-69

REVISIONS

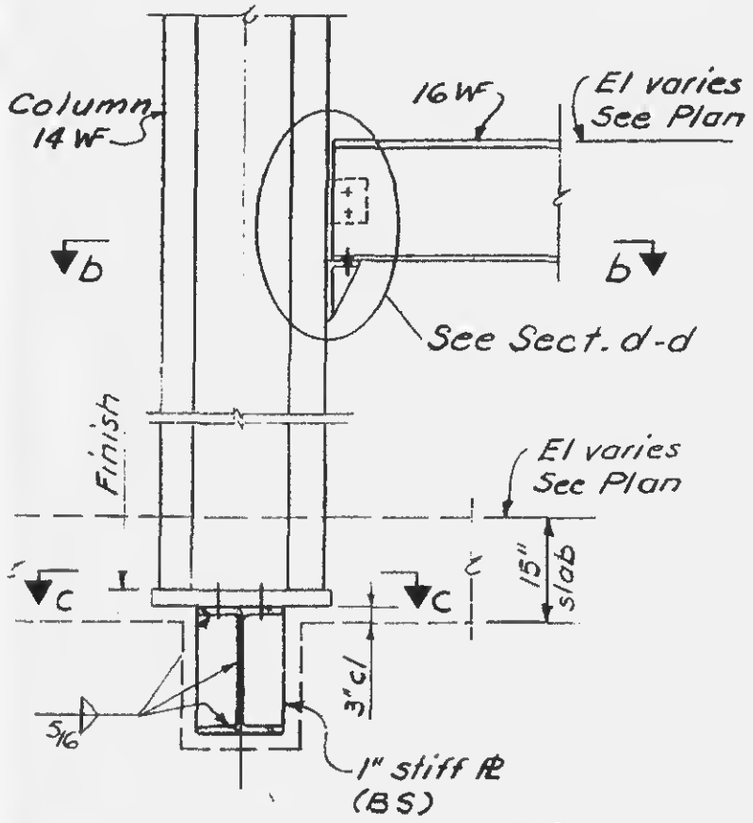

Section a-a
(see 12-JK1-47)

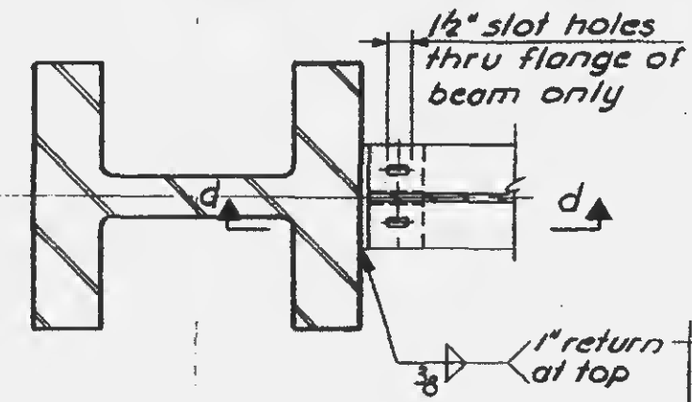

Section b-b

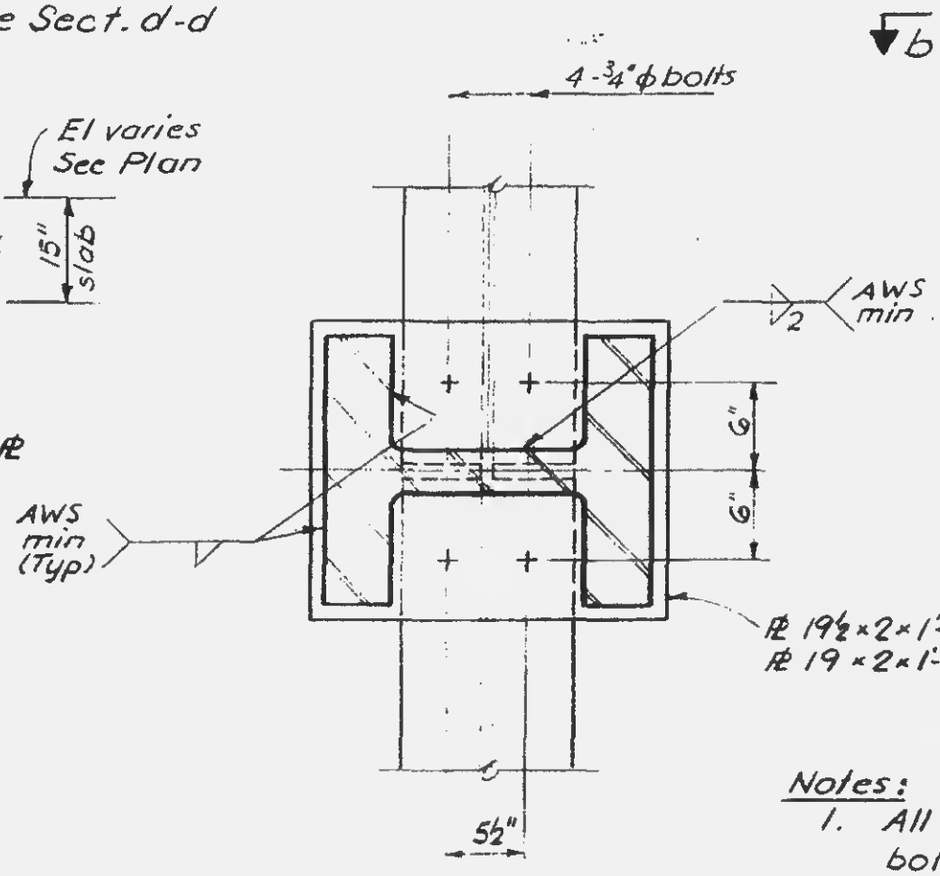

Section c-c

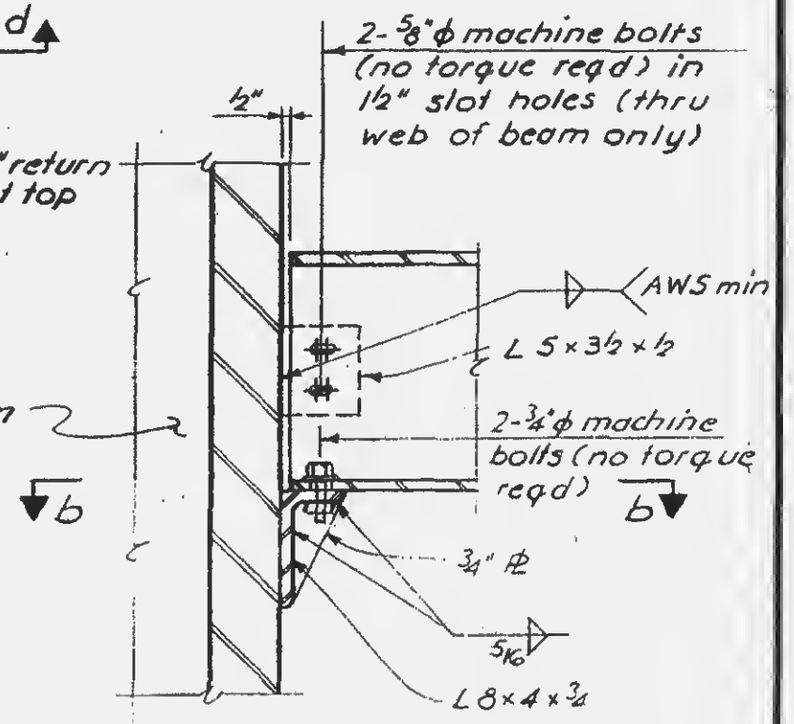

Section d-d

Notes:
1. All bolts shown to be A325 HS bolts (friction type) except as noted.

LICENSED PROFESSIONAL ENGINEER — LESLIE E. ROBERTSON — No. 34360 — UNIVERSITY OF THE STATE OF NEW YORK

DESIGNED

DRAWN: F. Smith

REVIEWED: E.L.

12-JK1-48