SKILLING, HELLE, CHRISTIANSEN, ROBERTSON

PROJECT THE WORLD TRADE CENTER — TYP. COMN. FOR COLS. WITHIN REFRIG. RM. AREA — DATE 11-24-67

REVISIONS
11-27-68

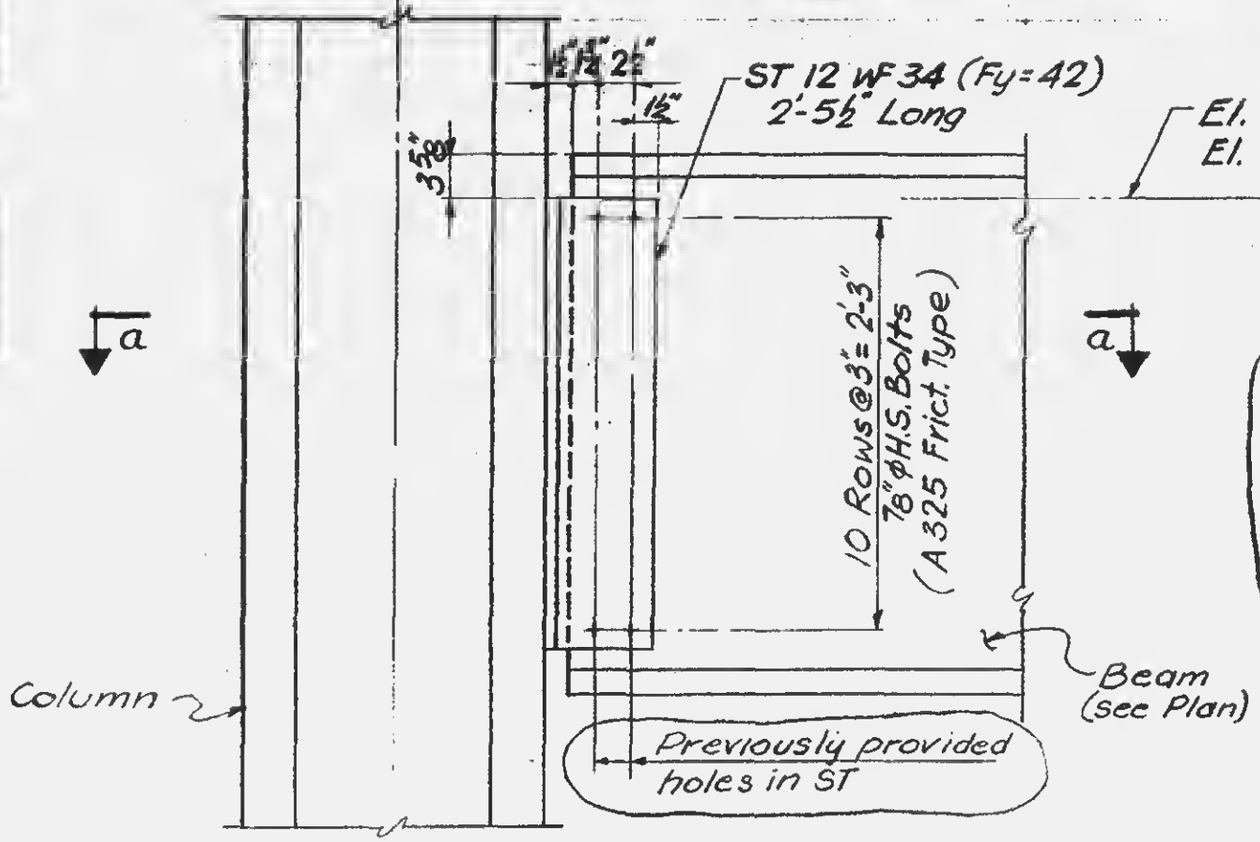

Notes:
1. IF bottom of beam is higher than bottom of ST 12 WF 34, cut and chip bottom flange.
2. Calculate No. of bolts per reactions as shown on Plan to match the spacing of holes previously provided in ST. Whenever possible, use the row closer to the column.

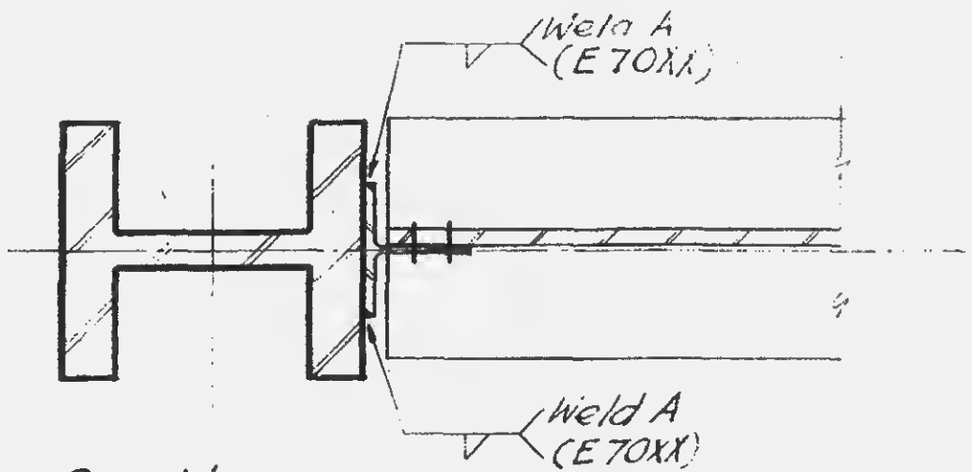

Section a-a

Provide this type of connection to columns within Refrigeration room area
(See Schedule on 12-JKI-53 for location)

TYPE III

WELD A:

⅜" weld for Col. with flange thickness 2¼" and less
½" weld for Col. with flange thickness greater than 2¼"
Provide 1" return at top.

LICENSED PROFESSIONAL ENGINEER
LESLIE E. ROBERTSON
No. 34360
UNIVERSITY OF THE STATE OF NEW YORK

12-JKI-56