SKILLING, HELLE, CHRISTIANSEN, ROBERTSON — Structural & Civil Engineers

PROJECT THE WORLD TRADE CENTER | TITLE BEAM CONNECTION DETAILS | DATE 3-21-69

REVISIONS

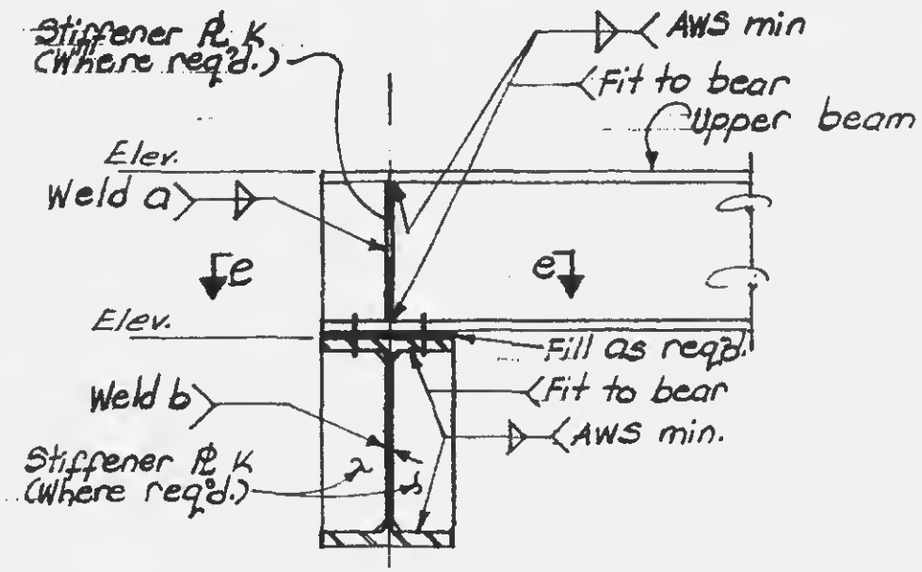

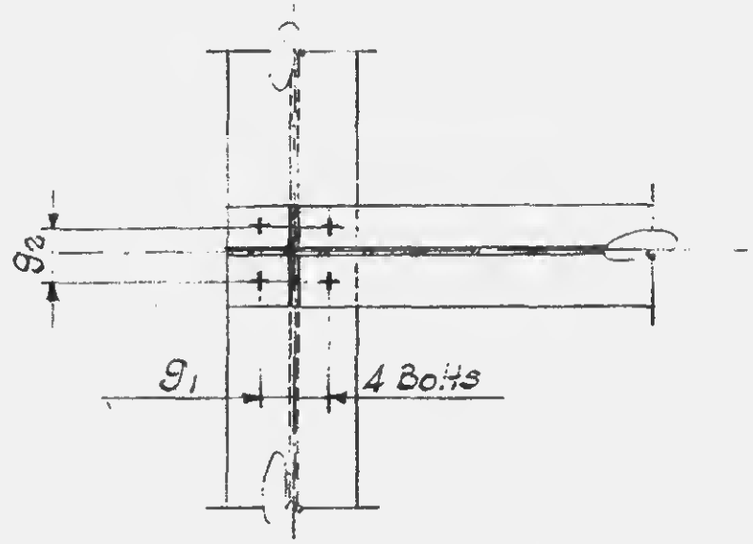

Section e-e
TYPE 'E' SERIES
(See schedule on 12JK1-60)

Notes:
1. All seats to have Fy same as that of upper beam. (Stiffener ② with Fy=42)
2. Length of all seats to be the same as flange width of lower beam.
3. 'g1' to be 'g' value of lower beam. 'g2' to be 'g' value of upper beam.
4. All bolts shown to be 7/8" ϕ H.S. bolts A325 friction type.
5. Where seat is not called out on schedule, use fill PLs only.

LICENSED PROFESSIONAL ENGINEER — LESLIE E. ROBERTSON — No. 34360 — UNIVERSITY OF THE STATE OF NEW YORK

DESIGNED

DRAWN S.T.M.

REVIEWED E.L.

12-JK1-64