SKILLING - HELLE - CHRISTIANSEN - ROBERTSON Structural & Civil Engineers

PROJECT THE WORLD TRADE CENTER | TITLE BEAM CONNECTION DETAILS | DATE 1-8-68

REVISIONS

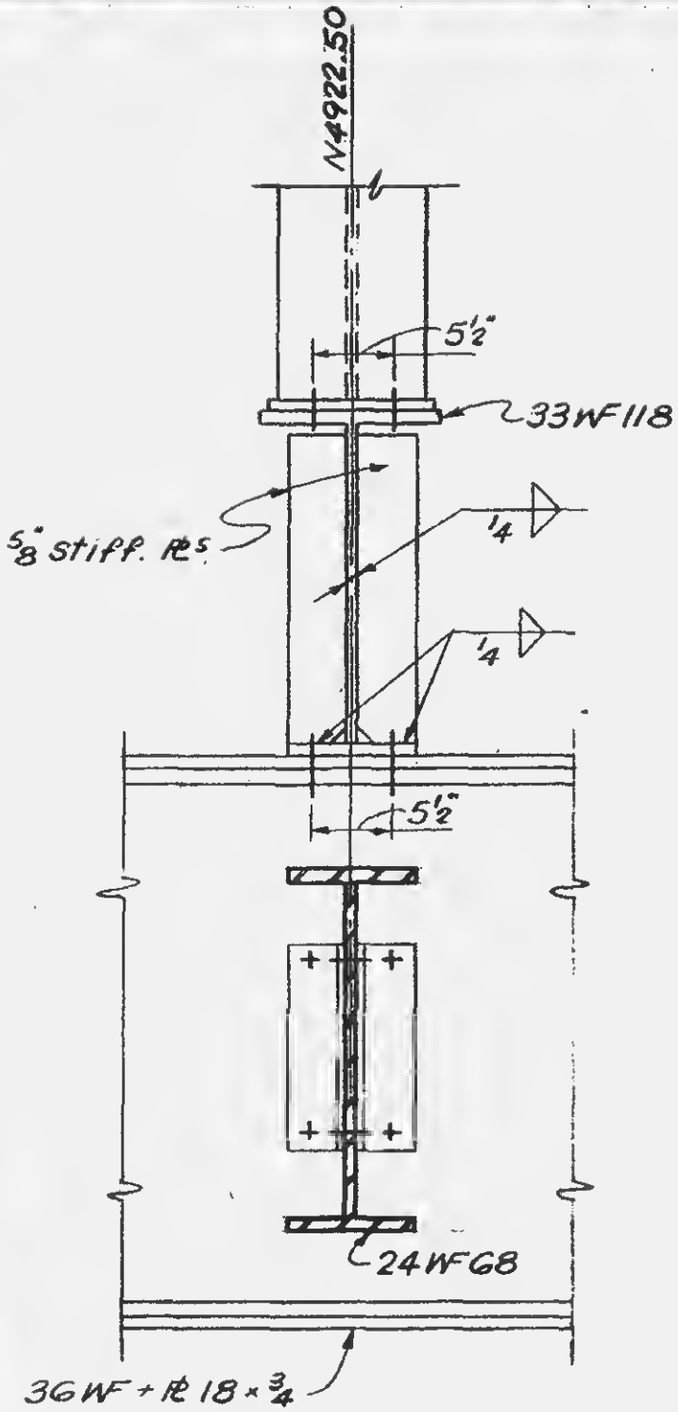

Section a-a

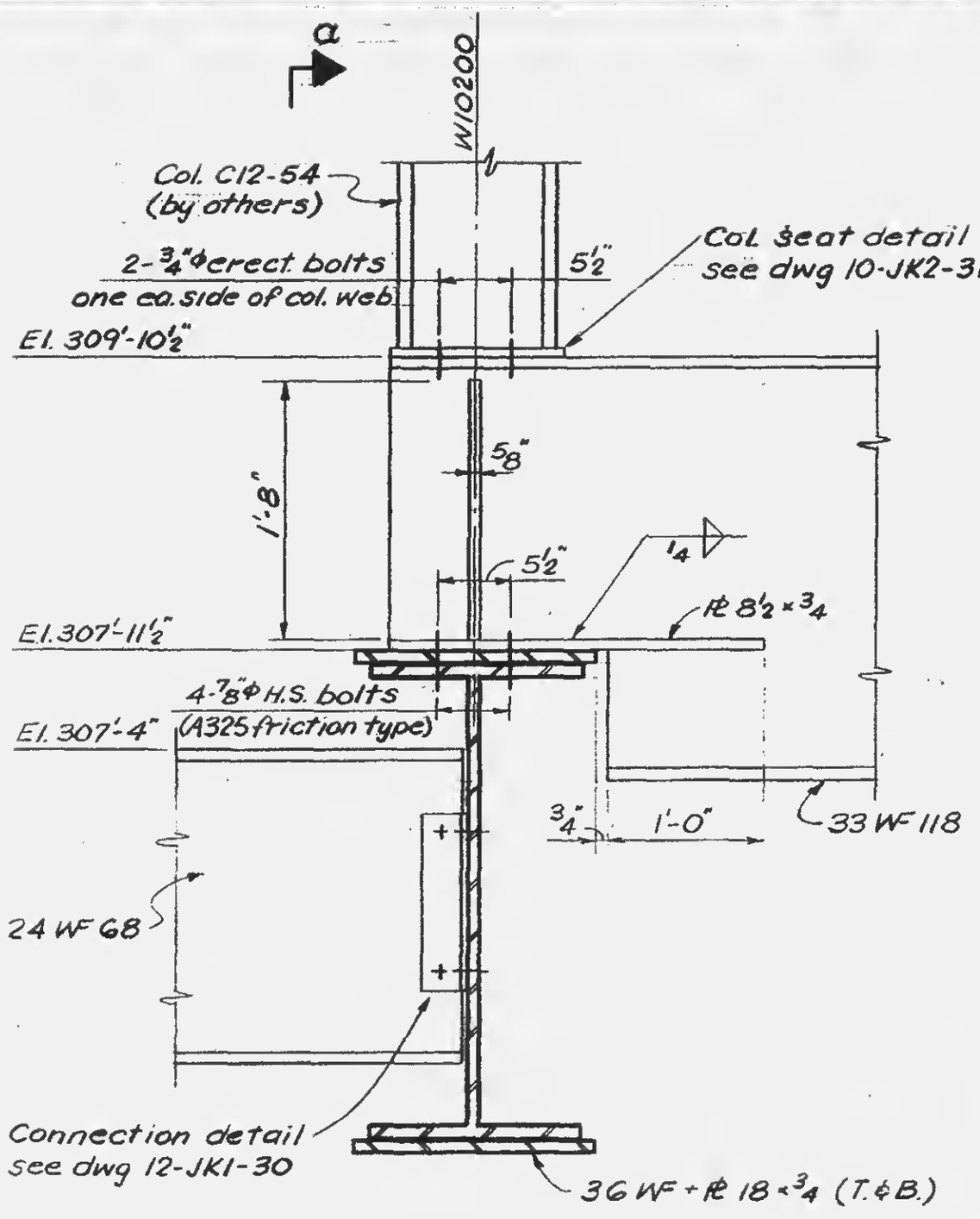

LICENSED PROFESSIONAL ENGINEER
LESLIE E. ROBERTSON
No. 34360
REGISTERED BY THE STATE OF NEW YORK

12-JK1-65