SKILLING - HELLE - CHRISTIANSEN - ROBERTSON Structural & Steel Engineers

PROJECT THE WORLD TRADE CENTER | TITLE BEAM CONNECTION DETAILS | DATE 1-5-66

REVISIONS

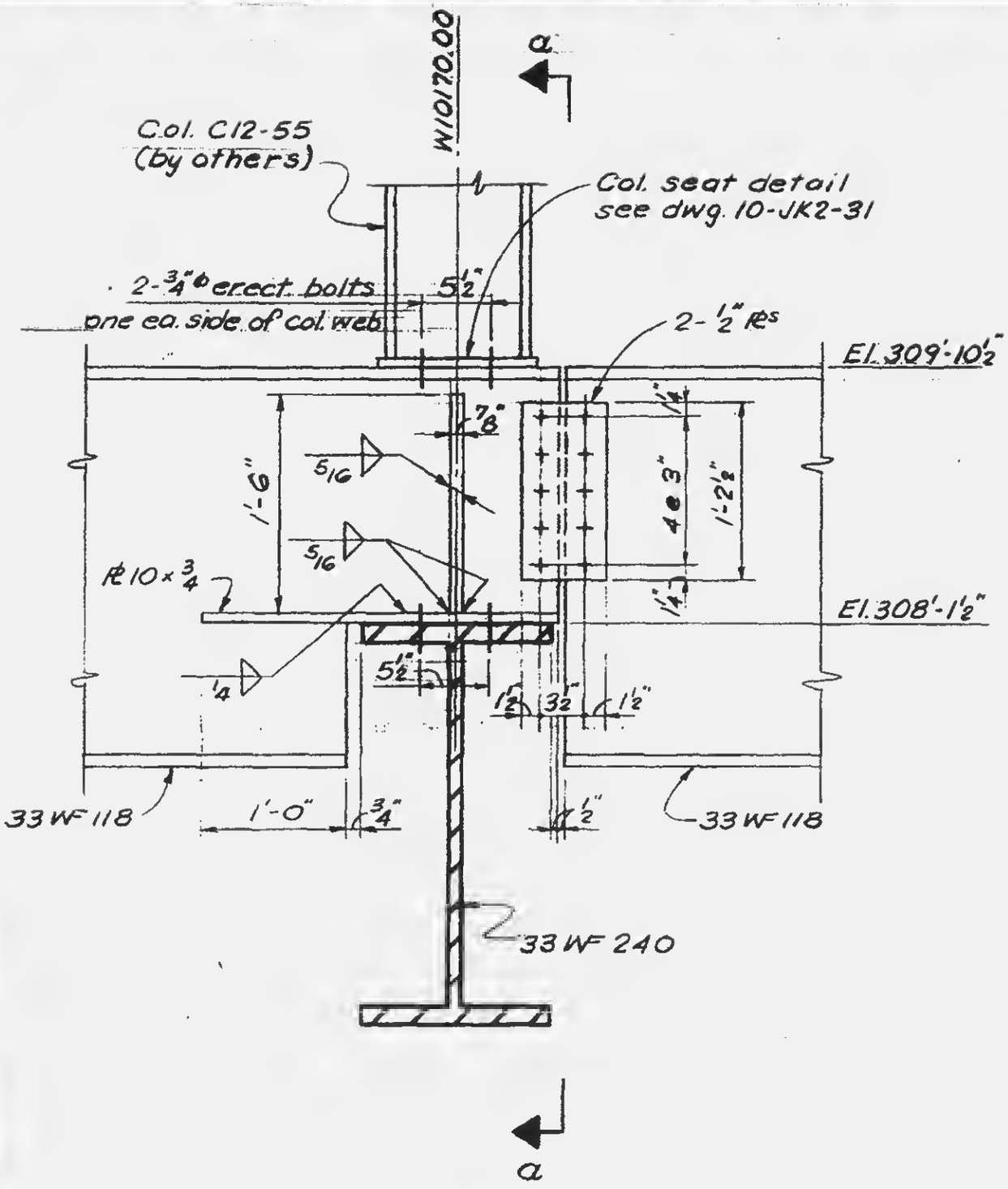

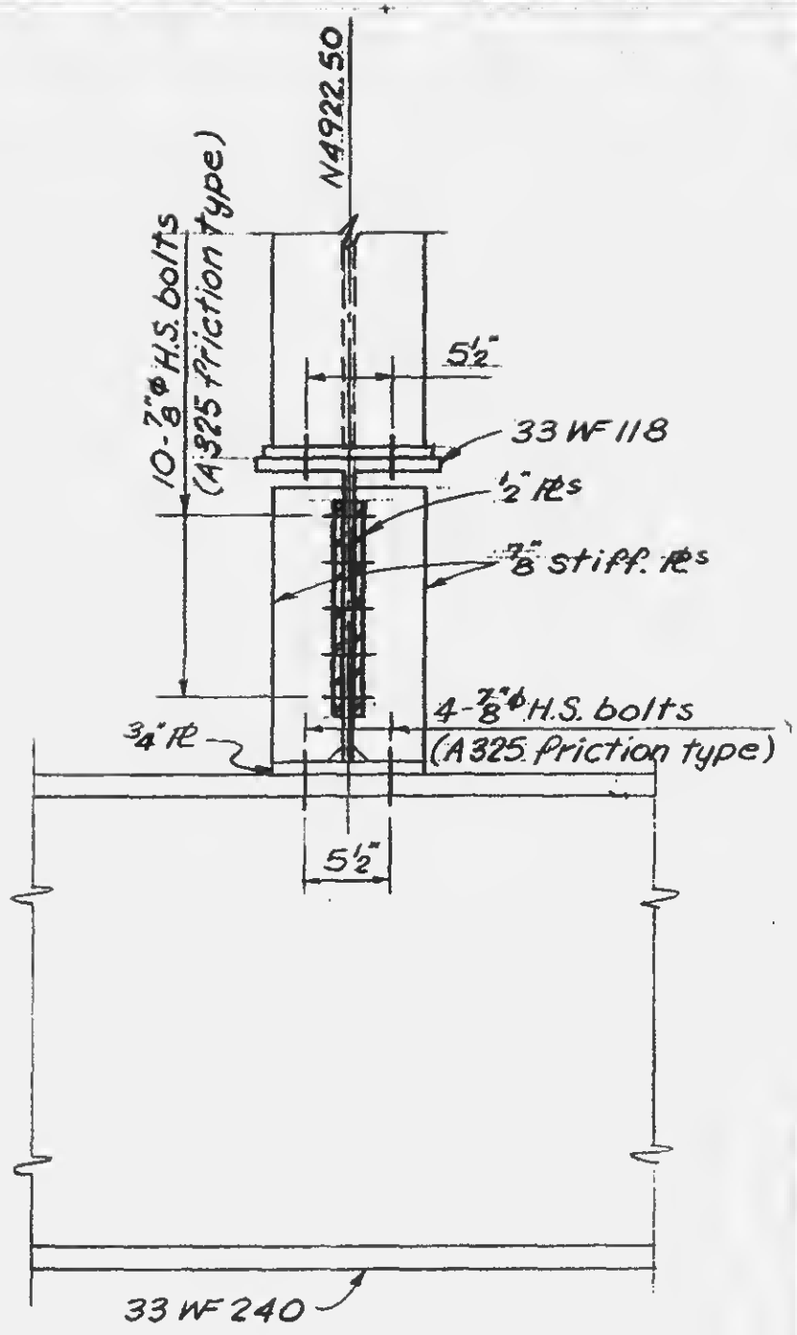

Section a-a

LICENSED PROFESSIONAL ENGINEER
LESLIE E. ROBERTSON
NEW YORK

12-JK1-66