SKILLING, HELLE, CHRISTIANSEN, ROBERTSON — Structural & Civil Engineers

PROJECT: THE WORLD TRADE CENTER | TITLE: BEAM DETAIL-ELEVATOR PITS | DATE: 1-16-72

REVISIONS

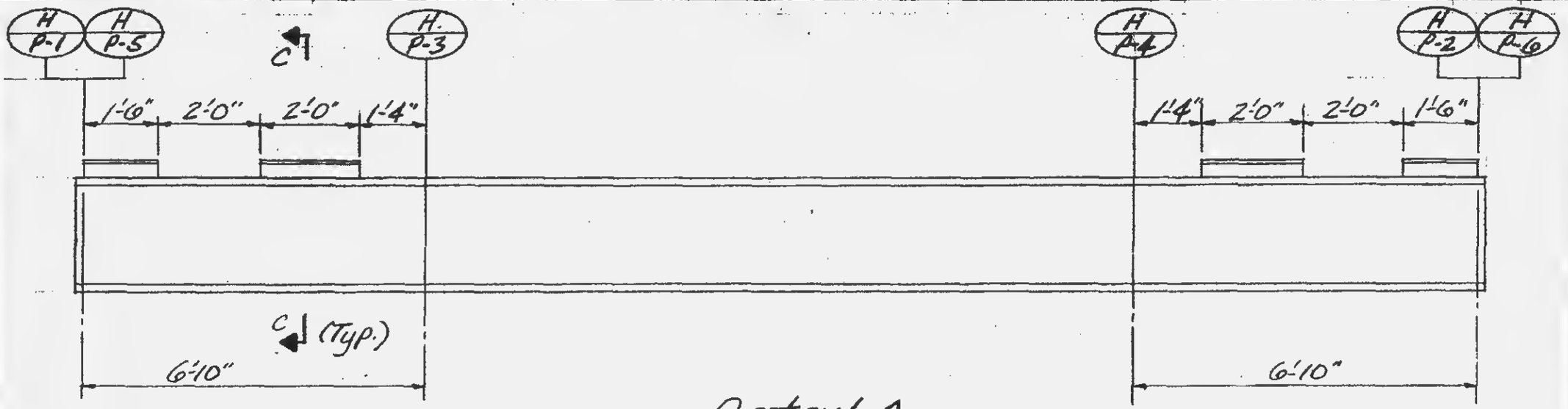

Detail A

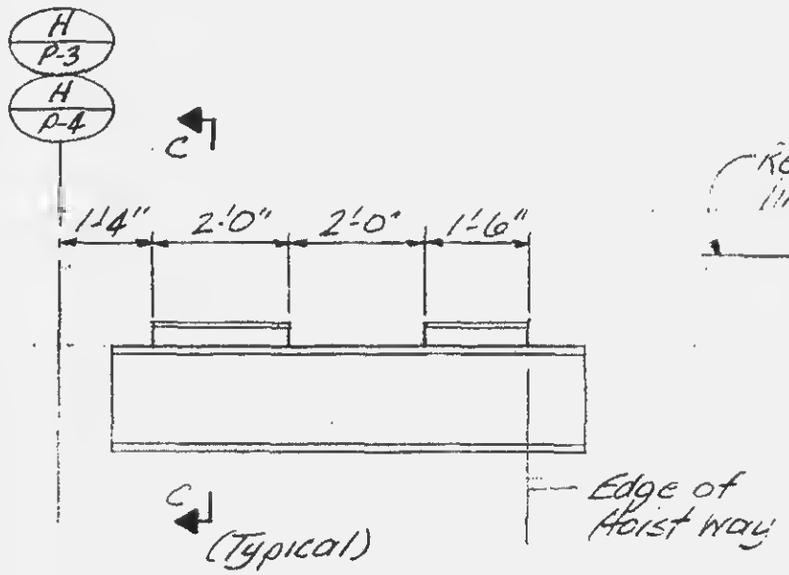

Detail B

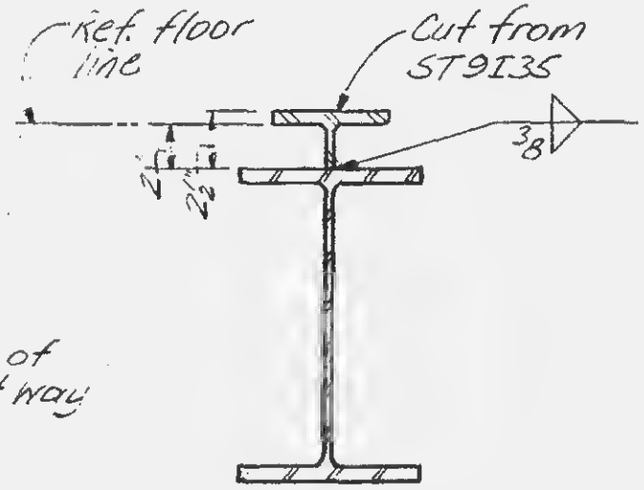

Detail C

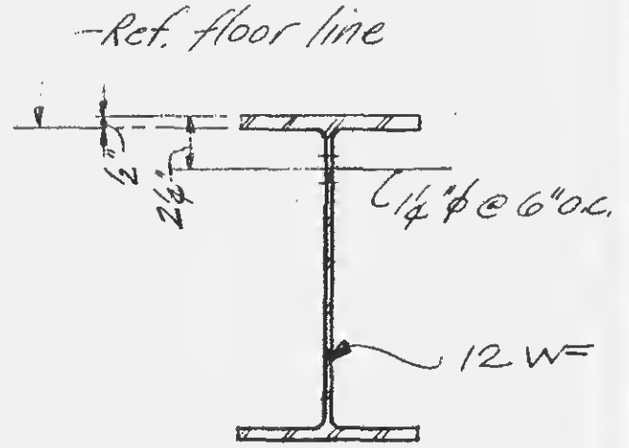

Section D-D

LICENSED PROFESSIONAL ENGINEER — LESLIE E. ROBERTSON — No. 34360 — UNIVERSITY OF THE STATE OF NEW YORK

DESIGNED

DRAWN

REVIEWED W Brewer

Z-JKI-70G